DAWSON
CONSTRUCTION PLANT LTD

HPH2400E HYDRAULIC HAMMER

USER'S MANUAL & PARTS LIST

INNOVATIVE PILING EQUIPMENT

- HYDRAULIC PILING HAMMERS
- EXCAVATOR MOUNTED VIBRATORS
- EXCAVATOR MOUNTED DRILLS
- QUIET, VIBRATIONLESS PUSH-PULL PILING
- PILE EXTRACTION
- SHEET PILE GUIDE FRAMES
- SHEET PILE CAPPING SYSTEMS
- CFA CLEANERS
- PILE POINTS & SPLICERS
- HANDLING / LIFTING

www.dcpuk.com

HPH 2400E HYDRAULIC HAMMER & POWER PACK SUMMARY

DAWSON
CONSTRUCTION PLANT LTD

USER'S MANUAL

HAMMER SERIAL No: .....

HAMMER COMMISSION DATE: .....

POWER PACK SERIAL No: .....

POWER PACK COMMISSION DATE: .....

ENGINE TYPE: .....

ENGINE SERIAL No: .....

POWER PACK TYPE: .....

CONTENTS

The responsible person:-

DAWSON CONSTRUCTION PLANT LIMITED
CHESNEY WOLD, BLEAK HALL
MILTON KEYNES MK6 1NE
ENGLAND

EC DECLARATION OF CONFORMITY

Description: HAMMER + POWER PACK

Type: HPH2400E (Electric)

Serial Number: _____

The above mentioned equipment conforms to the Machinery Directive 89/392/EEC(a) as amended by Council Directive 91/368/EEC(b), Council Directive 93/44/EEC(c) and Article 6 of Council Directive 93/68/EEC(d).

Signed for and on behalf of
Dawson Construction Plant Limited: .....

Name: DAVID BROWN

Position: MANAGING DIRECTOR

Date: ...../...../.....

INTRODUCTION

The D.C.P. Hydraulic Hammer has been designed and manufactured to meet the demands of today's contractor. The hammer has many advantages over traditional piling hammers, including other hydraulic hammers:

- The hammer fits all British and most foreign single sheet piles as well as numerous 'H' piles using one set of legs and inserts. It will also fit pairs of sheet piles and open bent corners with the same configuration. This significantly improves productivity and reduces costs.
- Hydraulic hammers are inherently efficient, typically 80-90% of the potential driving energy being transferred into the pile as opposed to 25-35% for diesel hammers.
- Rapid blow rate. The hammer is double acting, not only giving high energy output, but increasing the speed of operation. This inevitably increases production and keeps the pile on the move.
- Intelligent variable stroke controlled, between limits, at the touch of a button. This enables precise energy control which is very important when commencing piling or when coping with delicate operations. Full energy monitoring on screen.
- Robust construction. The hammer has been designed with full knowledge of what is required of piling equipment. A quick look at the hammer sitting on a pile will confirm this.
- With the hammer weighing only 6 tonnes, it lends itself to being used on long reach jobs where there are few economic alternatives.
- Noise levels are considerably lower than that of diesel or air hammers.

Transmitted ground vibrations have been measured lower than that of a vibrator.

1.1 Basic Safety Points

- Ear protection should be worn when in close proximity of the hammer.
- Keep clear of the hammer and/or power pack when they are being lifted.
- Avoid standing directly below the hammer when it is piling.
- Adhere to maintenance requirements set out in this manual.
- Lift equipment using lifting points specified only (see figures over).

1.2 Transportation and laying down hammer

- BEFORE operating hammer first time AND after each lay-down use inspection holes to ensure dolly is seated correctly in anvil before striking.
- WHEN LAYING DOWN HAMMER, support top of hammer at higher level than bottom of hammer.
- TRANSPORTATION, support top of hammer at higher level than bottom of hammer.

(con't)
Transportation and laying down hammer

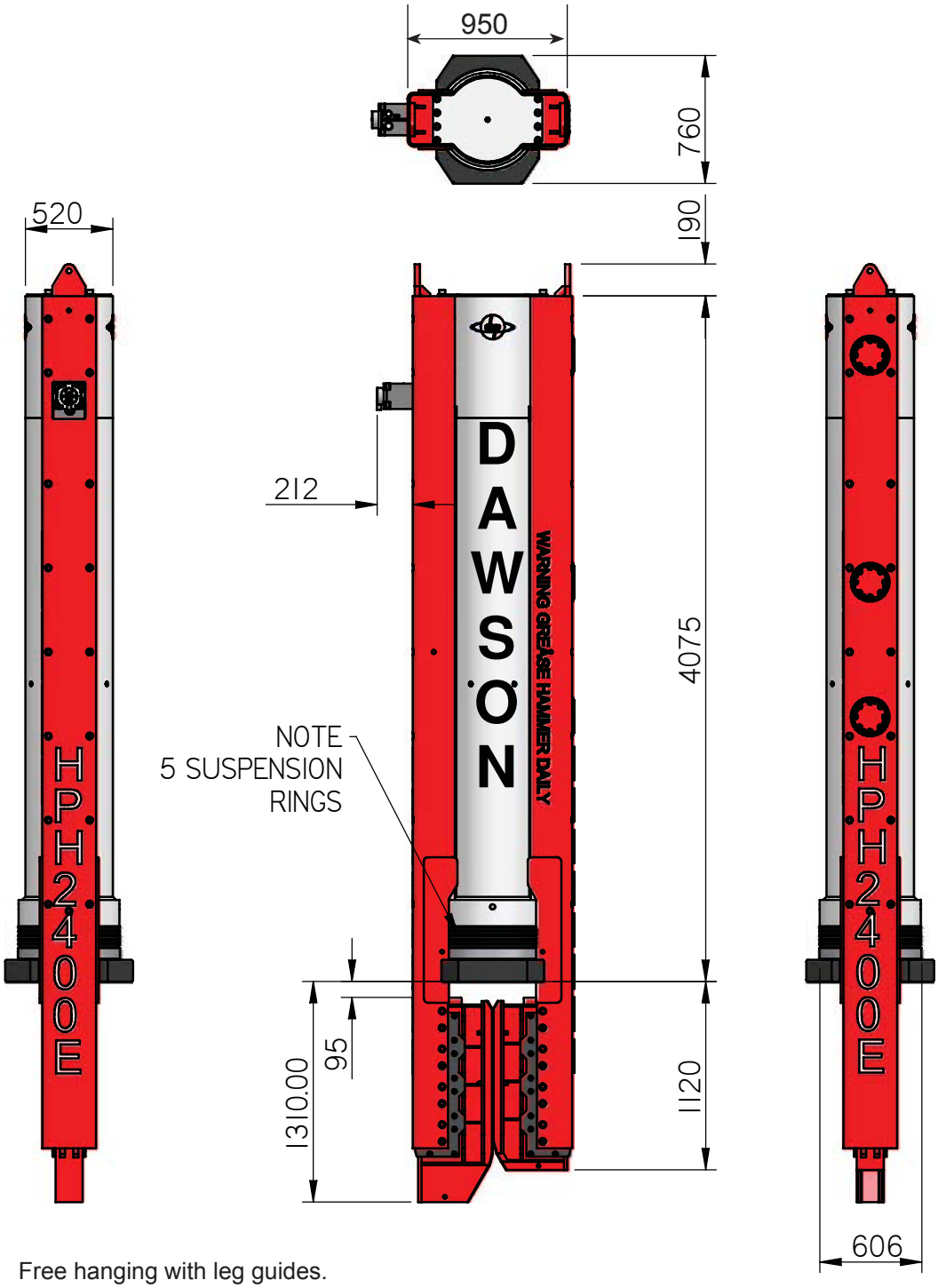

Free hanging with leg guides.

The basic hammer can be fitted with leg guides that have flexible leg inserts as shown. Different leg inserts can be used to adapt to different sheet pile types. The hammer readily fits pairs of most U or Z sheet piles with different inserts. Inserts can also be supplied to permit the hammer to drive H-piles.

SPECIFICATION	UNITS	HPH2400E
RAM WEIGHT	kg	1,900
IMPACT VELOCITY	m/s	4.98
MAXIMUM PILE ENERGY	KNm	24.00
MINIMUM PILE ENERGY	KNm	10.0
BLOW RATE	bpm	80-120
MAXIMUM - PILE MOMENTUM	kg.m/s	9,462
WEIGHT- Ø914 GUIDE SLEEVE CONFIGURATION	kg	7,600

(con't)
Transportation and laying down hammer

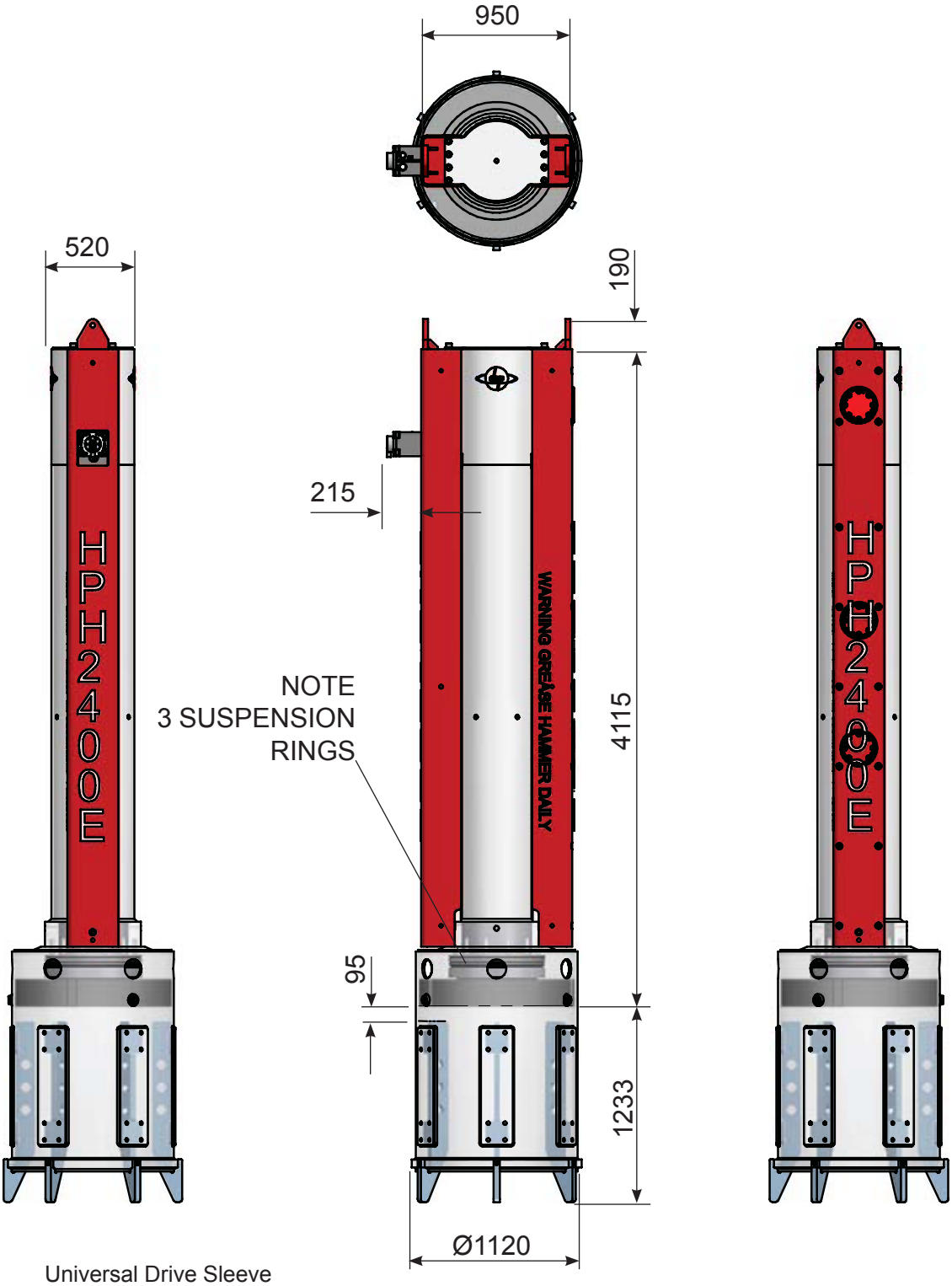

Universal Drive Sleeve

Leg inserts available to suit tube size upto Ø914 max. (as shown)

SPECIFICATION	UNITS	HPH2400E
RAM WEIGHT	kg	1,900
IMPACT VELOCITY	m/s	4.98
MAXIMUM PILE ENERGY	KNm	24.00
MINIMUM PILE ENERGY	KNm	10.0
BLOW RATE	bpm	80-120
MAXIMUM - PILE MOMENTUM	kg.m/s	9,462
WEIGHT- Ø914 GUIDE SLEEVE CONFIGURATION	kg	7,600

(con't)
Transportation and laying down hammer

Weight of power pack - 3000 Kgs

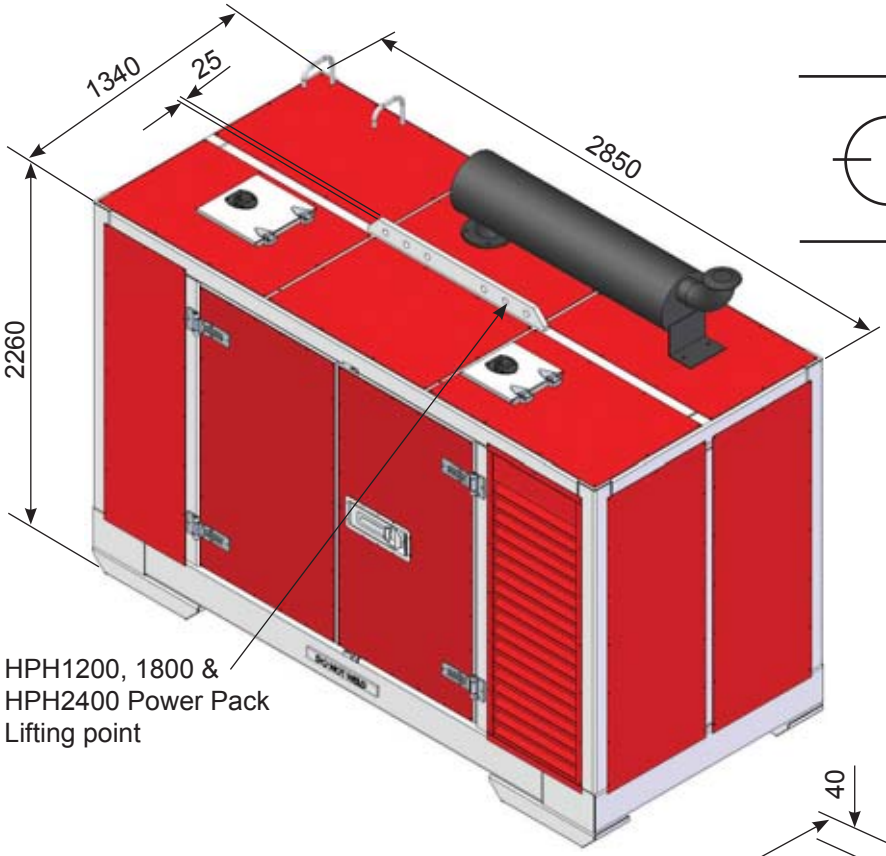

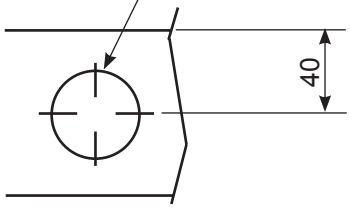

Weight of Hammer - 6000 Kgs
Use a double leg sling & shackles to suit.

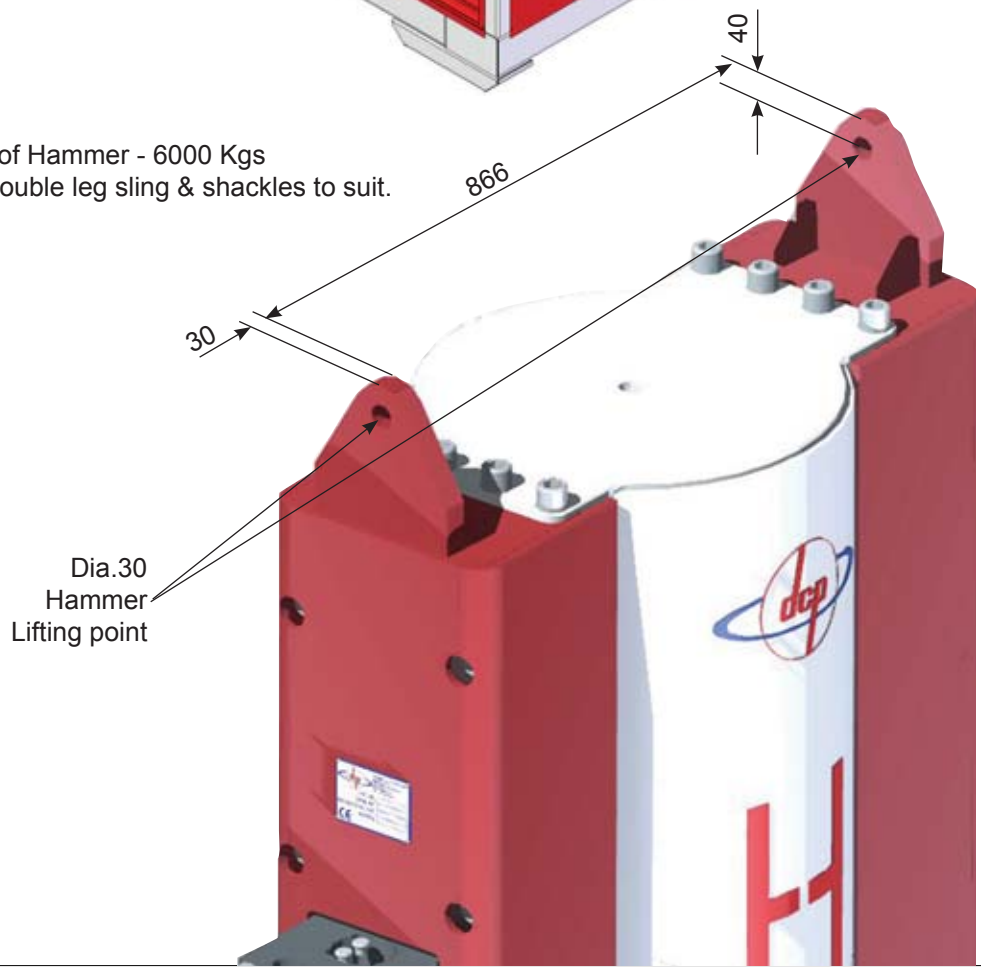

HOW DOES THE HAMMER WORK

The D.C.P. Hydraulic Hammer consists of a ‘drop weight’ driven up and down by ‘hydraulic rams’ inside the ‘casing.’ The hydraulic ram is double acting which means the drop weight is accelerated both on the upstroke and on the downstroke. This gives the hammer its very efficient energy output and high blow rate.

The oil supplied to the hydraulic ram comes from the power pack via a ‘control valve’ mounted inside the top of the hammer. This control valve switches the oil supply on or off at the upstroke side of the hydraulic ram i.e. oil supply ‘on’ lifts the drop weight and oil supply ‘off’ drops it.

Dawson Construction Plant has developed an industry leading, robust and simple, electronic control system that constantly monitors the drop weight position. This constant monitoring allows the switching timing on the main hydraulic spool to be trended to continually optimise hammer performance throughout varying piling conditions.

With constant drop weight position monitoring, the velocity of the drop weight is also known, therefore energy output can be accurately measured and is displayed to the operator on the powerpack interface screen. This information can be recorded direct to a laptop via a Dawson software interface, and can be saved in standard spreadsheet formats, giving a blow by blow account of every pile driven and a day to day productivity record.

The main screen displays bar graphs showing hammer stroke & hydraulic oil temperature.

An Off Pile indicator confirms when the hammer is securely seated on the pile, and allows piling to commence.

There are numerical read outs showing blows per minute, energy per blow and total blows. The lower reading shows blows in LAP cycle. (Measuring blows per increment). The units can be changed from imperial to metric.

The history screen provides information on the total number of start ups / total hours / total blows and total energy through out the life of the hammer.

INTERFACE SCREEN MOUNTED ON POWER PACK

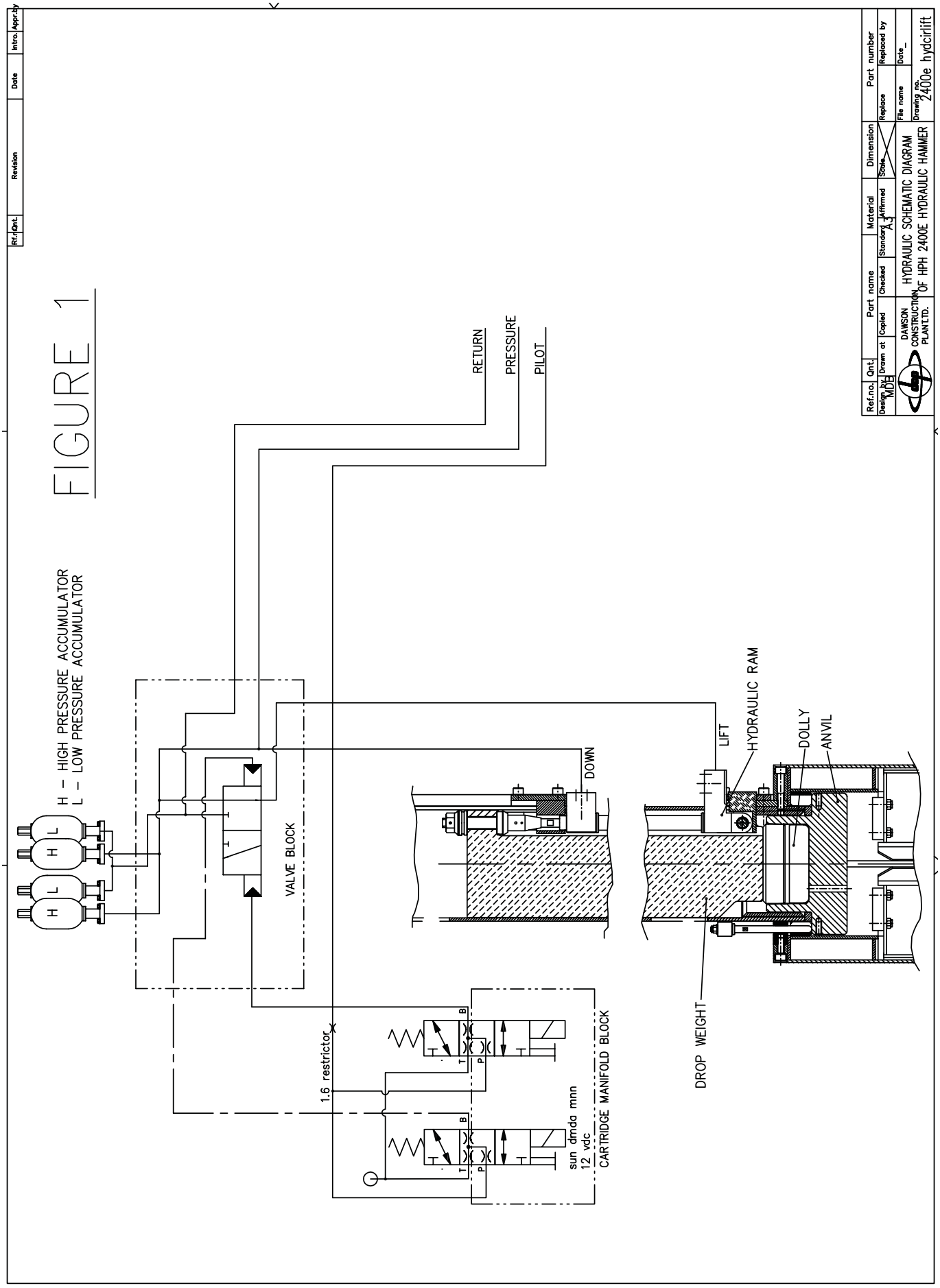
FIGURE 1
H – HIGH PRESSURE ACCUMULATOR
L – LOW PRESSURE ACCUMULATOR
RETURN
PRESSURE
PILOT
VALVE BLOCK
DOWN
LIFT
HYDRAULIC RAM
DOLLY
ANVIL
DROP WEIGHT
1.6 restrictor
sun dmda mnn
12 vdc
CARTRIDGE MANIFOLD BLOCK
Ref.no.
Qnt.
Part name
Material
Dimension
Part number
Design by
MDB
Drawn at
Copied
Checked
Standard
AJ
Affirmed
Scale
Replace
Replaced by
DAWSON CONSTRUCTION PLANT LTD.
HYDRAULIC SCHEMATIC DIAGRAM OF HPH 2400E HYDRAULIC HAMMER
File name
Date
Drawing no.
2400e hydcirlift

POWER PACK AND HAMMER OPERATION

3.1 Connecting the hydraulic hoses and control pendant

(The power pack must be turned off at this time to enable correct installation of the hoses)

There are three hydraulic hoses running between the power pack and the hammer, viz:

1. Pressure line (1¼" BSP) carries the main high pressure oil supply to the hammer.
2. Return line (1½" BSP) returns low pressure oil from the hammer to the power pack.
3. Pilot Line (3/8" BSP)

The pressure/return hoses have the same specification. However, the return hose ends have larger fittings than the pressure hose to avoid possible confusion. Similarly, pilot hoses have different end types. The hoses should be left connected to the hammer at all times - this reduces the likelihood of oil contamination and reduces leakage problems. The hoses should be connected/ disconnected at the outlets of the power pack. All these connectors are of the 'quick-release' type. The hoses should be disconnected from the power pack when moving the power pack around to avoid straining the connectors.

Make sure that the connectors are thoroughly cleaned when making a connection

Having connected the hoses, next fit the hand control pendant connector block to the multi-pin outlet from the power pack. This is positioned below the instrumentation panel of the unit. Check that a clean connection is made and that no water is present in either half of the connection. The 'power' switch on the controller should be turned off.

3.2 Checking the power pack before starting

Having connected the hydraulic hoses and hand control pendant, as described in section 3.1, next check fluid levels on the power pack. Check:

a. engine oil level
b. diesel fuel level
c. hydraulic oil level, and fill if required

Notes:-

1. The diesel fuel and hydraulic oil tanks have sight gauges on the side of the tanks.

2. The power pack will not run if the hydraulic oil level is too low.

3. The hammer will not run if the hydraulic oil temperature is too low. The auto warm-up routine must be used to pre-warm the oil. See section 3.3.1.

3.3 Starting the power pack (see fig. 2)

Prior to starting the power pack, check that the hand control pendant is turned 'off.' Set the throttle control lever to half of full throttle . Turn 'on' the battery isolator. Push the engine start push button until the engine starts.

Allow the engine to reach working temperature by running it at 1500 r.p.m. under zero load for 10-15 minutes. Check all gauges and diagnostic lights for correct function of unit (diagnostic lights should be off.)

Notes:-

1. If any of the following L.E.D.'s oil hot/cold/low are 'on' when the isolator switch is turned 'on,' the power pack will not start. Rectify problem immediately.
2. If L.E.D. oil cold is on, the power pack will start but the pendant will be 'dead' until the hydraulic oil warm up procedure is carried out.

3.3.1 Hydraulic Oil Warm-up Procedure

If the hydraulic oil temperature is less than +25ºC, L.E.D. oil cold will be on and the oil will require warming prior to using the hammer.

The hand control pendant will be 'dead' for as long as L.E.D. oil cold is on.

To warm the oil:-

a) Run the engine at 1800 r.p.m.

b) Turn the 'warm-up/run' selector switch to 'warm-up'. (The engine should go under load and the high pressure gauge should read approx. 200 bar).

c) Leave the pack in this condition until the L.E.D. goes off. (The engine should come off load at the same time the L.E.D. goes out and gauge return to zero bar).

d) Turn the 'warm-up/run' selector switch to 'run'. The power pack is now ready for use.

3.4 Using the hammer

3.4.1 Installing hammer on the pile

The hammer must be sat correctly on the pile to avoid hammer or pile damage. The pile tops should be as level and square cut as possible. The hammer anvil must be in good condition.

Lift the hammer onto the pile(s) to be driven. Lower the hammer down until the handling slings lose their tension. At this point, the anvil should be seated correctly i.e. the rubber ring around the anvil should be compressed between the casing and the anvil. If it is not and there is a gap here, re-site the hammer.

Note: Before using the hammer (and particularly after transportation) check that the dolly is fitted correctly in the anvil. There are inspection holes at the bottom of the hammer casing to check this.

3.4.2. Bleeding air from the hammer hydraulic system - only required when running hammer after initial connection or following a repair.

When running the hammer for the first time after initial connection to the power pack, there will be air in the hydraulic system. The hammer will 'bleed' this air automatically but the following procedure must be applied:-

a. Run the power pack at 2200 r.p.m.

b. Turn on the control pendant 'power' button.

c. Adjust the stroke height indicator to minimum using the '↓' push button.

d. Set the 'Auto/Man' turn button to 'Man.'

e. Hold the 'start' push button down for 2-3 seconds.

f. Repeat (e) three or four times until the hammer consistently gives one or two small blows each time. Providing the hammer does not 'jump' on the pile, hold the 'start' push button down, so that the hammer gives several consistent blows, on the next operation. (Approximately 120 blows per minute.) If the hammer 'jumps' on the pile, because the drop weight is hitting the top of the hammer casing, the hammer will stop automatically. To reset see section 3.4.4.

g. Commence the piling operation using the hammer as required.

3.4.3 Pile driving with the hammer

Having the hammer sited on the pile and removed air from the hydraulic system (if necessary) as described above, the hammer is ready for pile driving:-

a. Increase the power pack engine speed to 2200 r.p.m. (having followed - “Starting the power pack”section 3.3)

b. Turn the hand control pendant ‘power’ button on.

c. Adjust the ‘stroke height indicator’ on the side of the hammer to minimum stroke by pressing the ‘↓’ push button.

d. Set the ‘Auto/Man’ selector button to the required position:

‘Auto’ - hammer will continue running automatically when the ‘start’ push button is pressed once.
‘Man’ - hammer will only run whilst the ‘start’ push button is held down.

e. Depress the ‘start’ push button as required by ‘Auto/Man.’

f. During operation the hammer stroke may be altered using the ‘↑‘ or ‘↓’ push buttons to adjust the stroke height indicator.

g. To stop the hammer whilst it is running on ‘Auto,’ turn the ‘Auto/Man’ selector to ‘Man’ or turn the ‘power’ selector off. It is good practice to start piling with the hammer set on minimum stroke, this limits unnecessary damage to both the hammer and the pile when the pile can be driven easily. The stroke may then be adjusted to suit the changing driving resistance.

On certain piling jobs, it may be possible to start driving on pairs of sheet piles, changing over onto a single sheet pile as the driving resistance increases (this will give maximum productivity.)

3.4.4 Cold running/ overtravel

The hammer ‘jumps’ on the pile top when trying to achieve full stroke if the hydraulic system is ‘cold.’ If this happens, the hammer will stop automatically. (Thus preventing internal damage to the unit.) The power pack will continue to run and the ‘pressure’ gauge will read approximately 240 bar.

In order to reset the hammer, turn off the ‘power’ selector on the hand control pendant and stop the power pack. Allow the engine to stop for approximately 10 seconds then restart the unit. Reduce the stroke of the hammer to minimum. Run the hammer at this lower setting until the oil is warm enough to allow correct full stroke setting. If reducing the stroke does not cure the problem, warm the hydraulic oil as described in section 3.3.1.

If the hammer overtravels again, refer to the Troubleshooting section 6.0.

THE HAMMER WILL NOT RUN IF IT IS NOT ALLOWED TO RESET CORRECTLY

3.4.5 Refusal

! Piling must stop with this hammer when the rate of driving reaches 10 blows per 25mm !

Continued use will result in hammer and/or pile damage

FIG. 2a Power Pack Instrumentation Panel

FIG. 2a Power Pack Instrumentation Panel - Interface screen operation

MAIN PAGE

The left of the page contains an oil temperature bar display.
The 'M' button bottom left selects the Maintenance page.
The Reset button resets the adjacent blow counter.
The Lap button resets another blow counter and freezes the adjacent blow count, a second press of the Lap button unfreezes the adjacent display.

HISTORY PAGE

MAINTENANCE PAGE

A password must be entered to allow access to the Config Page

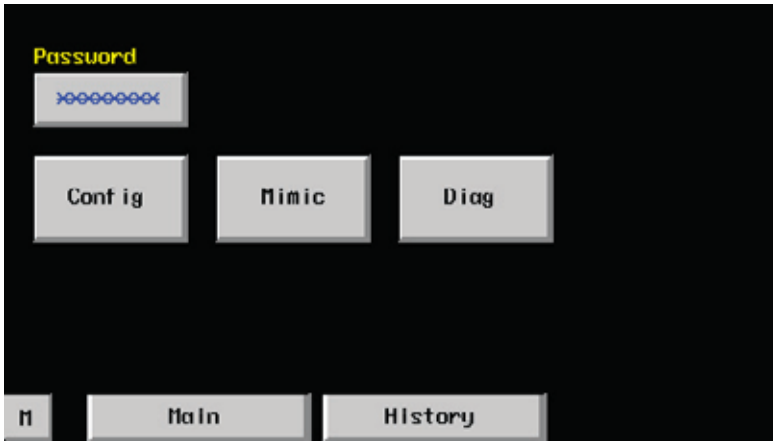

MIMIC PAGE

DIAG PAGE

All values on this page are in encoder pitch units (usually 6mm), velocities are pitch units per second.

Hpos = hammer current position

hpos_max = hammer maximum height during last blow

hpos_min = hammer minimum height during last blow

hveld_max = hammer downward velocity maximum during last blow

hvelu_max = hammer upwards velocity maximum during last blow

hvel_impact = hammer velocity on impact for last blow

codown_pos = hammer position when down valve was activated on last blow

coup_pos = hammer position when up valve was activated on last blow

cint_overflows = a count of errors where encoder edges occurred faster than the controller could process them, may indicate noisy or supurious encoder A and B signals.

enc_err_cnt = a count of events where encoder A and B edges occurred in an invalid sequence – more than 1 or 2 counts here indicates a problem with the encoder sensors.

Not show above are are two numbers indicating HMI and controller firmware versions.

CONFIG PAGE

The ‘Load’ button loads values from the VS1202. Touching a numeric value brings up a keypad allowing entry of a new value. The ‘Save’ button saves the current values to the VS1202 where (excepting Enc Pitch mm and Hmr Mass kg) they are used immediately. The ‘Keep’ button causes the values in the VS1202 to be saved to non-volatile memory.

Enc Pitch mm = distance between each edge of the encoder, the pitch of the encoder holes is 4 times this value.

Hammer positions are referenced to a zero datum which should be the lowest possible position of the drop weight.

Index Pos = position in encoder pitches where the index sensor transitions. This value effectively sets the zero datum position.

Impact Pos = position where drop weight impacts the pile, this is used predict when impact will occur and sets the bottom stroke limit for % stroke display.

Top Limit = maximum allowable height for the drop weight. The system automatically decreases stroke if the drop weight gets within 2 encoder pitches of this limit.

Hmr Mass kg = drop weight mass used to calculate blow energy.

UV Op Time ms = This value sets a notional time change over of the shuttle valve to the upwards direction. When the drop weight is falling the system will activate the up valve when it predicts impact will occur within this time value. This value is important, too high and the drop weight will be decelerating before impact, too low and speed will be reduced, much too low and the drop weight will drive into the pile causing the hammer to lift.

DV Op Time ms = this value is currently unused.

The 4 ‘Oil’ values set the temperature sensor lower and upper limit temperatures and the high and low oil temperature thresholds (all in degrees C).

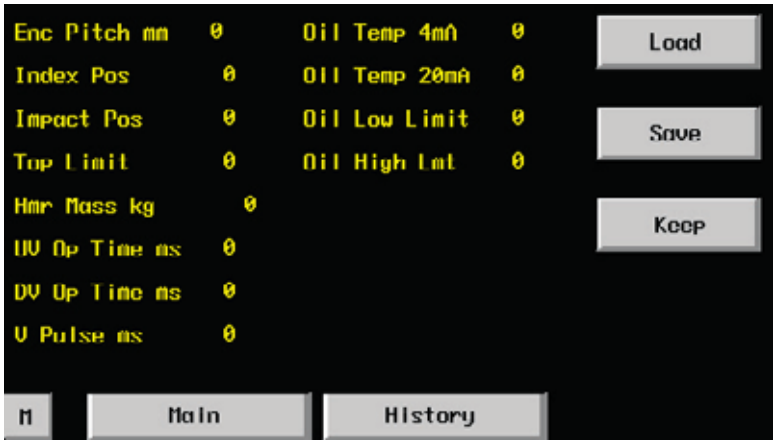

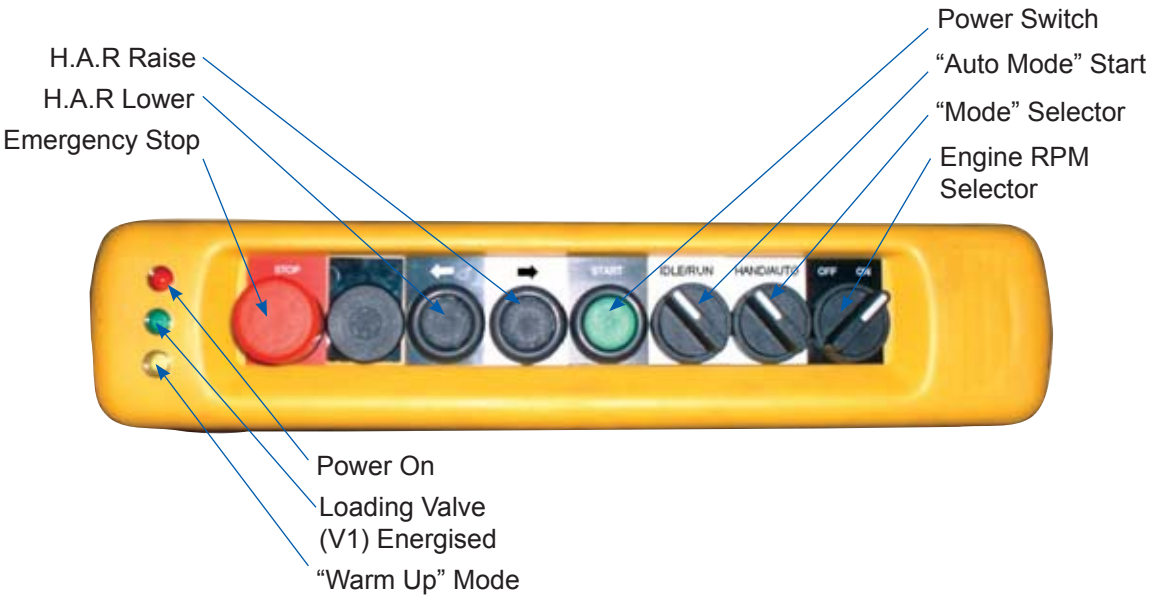

FIG. 2b Pendant Features

3.5 Using the hammer underwater

It is possible to drive piles with this hammer underwater. However, the hammer must be prepared correctly in order to do so
- it can not be used underwater in standard format.

The work involved is briefly as follows:-

a) The stroke adjuster 'slot' in the leg guide must be sealed with a cover.

b) The insides of the hammer should be suitably greased to minimise the effects of corrosion.

c) The gaps between hammer casing, leg guides and top cover must be sealed with silicone mastic.

d) The inspection holes near the bottom of the hammer casing must be plugged.

e) A threaded compressed airline port must be added in the bottom end of the hammer casing or leg guide.

f) The hammer must be run in conjunction with a 35/70 c.f.m. (100 psi) air compressor.

g) The hammer grease nipples must be greased after every pile drive to ensure ample lubrication.

NOTE: FOR DETAILED ASSISTANCE WITH THIS TYPE OF WORK PLEASE CONTACT THE MANUFACTURER.

3.6 Wider or special pile sections

The HPH 2400 hammer in standard format will drive a considerable range of steel piles. In some applications, however, where sheet piles are particularly wide or perhaps boxed together it is possible to use simple leg insert modifications and/or spreader plates to give improved pile coverage reducing pile head stress and improving productivity rates.

The standard leg inserts can have "wing extensions" bolted on to correctly centralise the hammer on a single sheet pile. Then either a special anvil can be used to give wider coverage, or, by dropping the inserts to a lower set of location holes, a 'spreader plate' can be added below the standard anvil to give improved pile coverage. This is a tried and tested technique (see figure 3).

With tubular piles, for example, the standard inserts can be removed and in place some simple bolt on plates added to centralise the hammer on the tube (see figure 4). A further refinement, if necessary, is to weld a ring onto the underside of the anvil to give correct location on the tube.

PLEASE CONTACT THE MANUFACTURER IF YOU HAVE A SPECIFIC PILE DRIVING PROBLEM - IT MAY HAVE BEEN DONE BEFORE!

Rf.nr	Qnt.	Revision	Date	Intro.	Appr.by

FIGURE 3

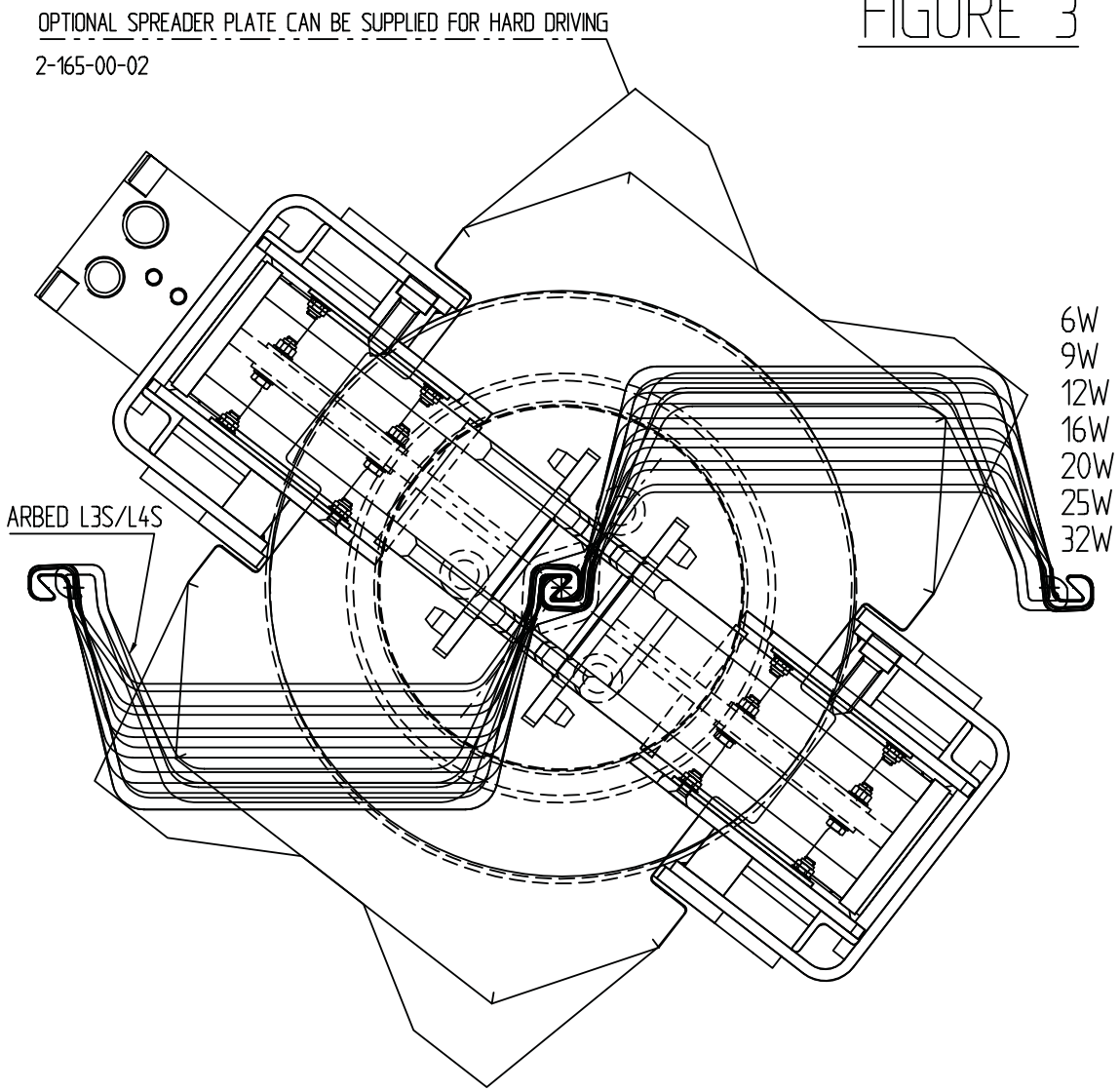

DRIVING LARSSEN W's IN PAIRS

HAMMER CAN BE READILY USED IN STANDARD FORMAT
IMPROVED PILE COVERAGE CAN BE ACHIEVED AS SHOWN

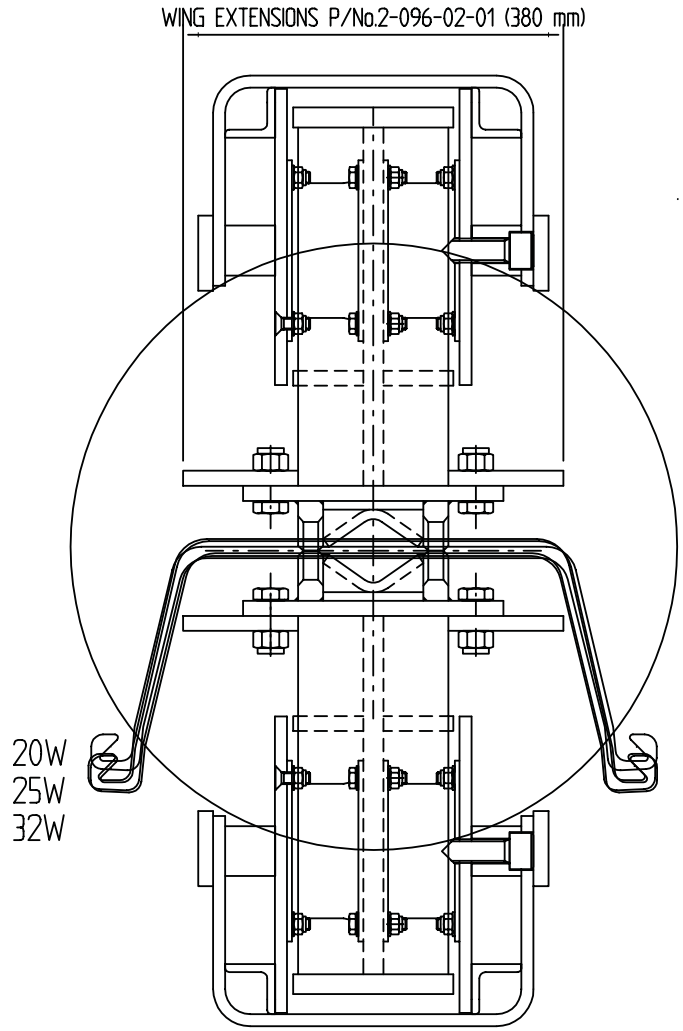

DRIVING LARSSEN W's IN SINGLES

HAMMER CAN BE READILY USED IN STANDARD FORMAT
BUT WING EXTENSIONS WILL CENTRALISE HAMMER AS SHOWN

Ref.no.	Qnt.	Part name	Material	Dimension	Remark
Design by M.D.B	Drawn at	Copied	Checked	Standard A3	Affirmed
Scale 1 : 5	Replace	Replaced by			
DAWSON CONSTRUCTION PLANT LTD.	HPH2400 MKII HAMMER ON B.S.C LARSSEEN 'W' SHEET PILE SECTIONS	File name	Date 22-4-09	Drawing no. 2tintlw-MKII	

Rf.nr	Qnt.	Revision	Date	Intro.	Appr.by

FIGURE 4

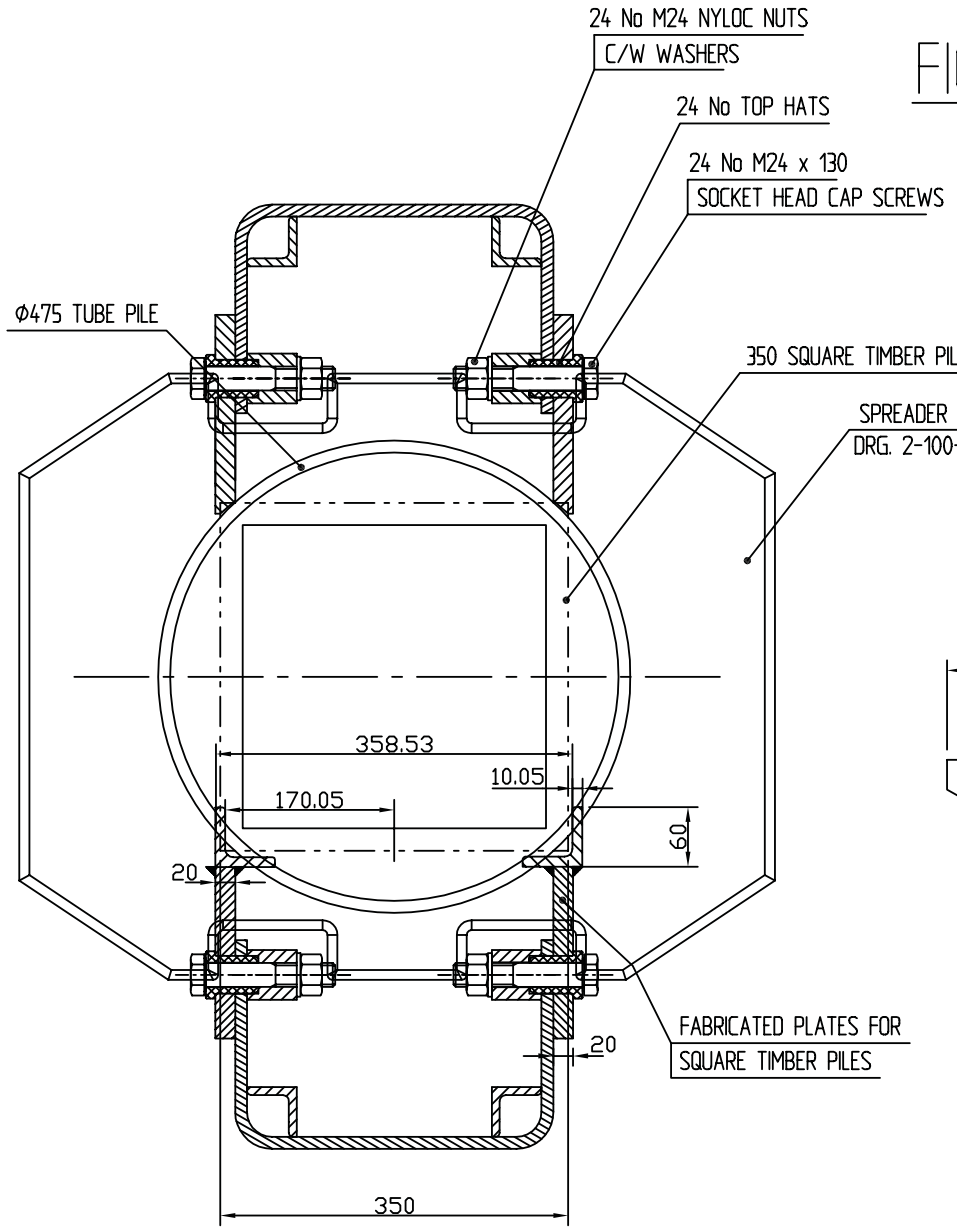

STANDARD HAMMER

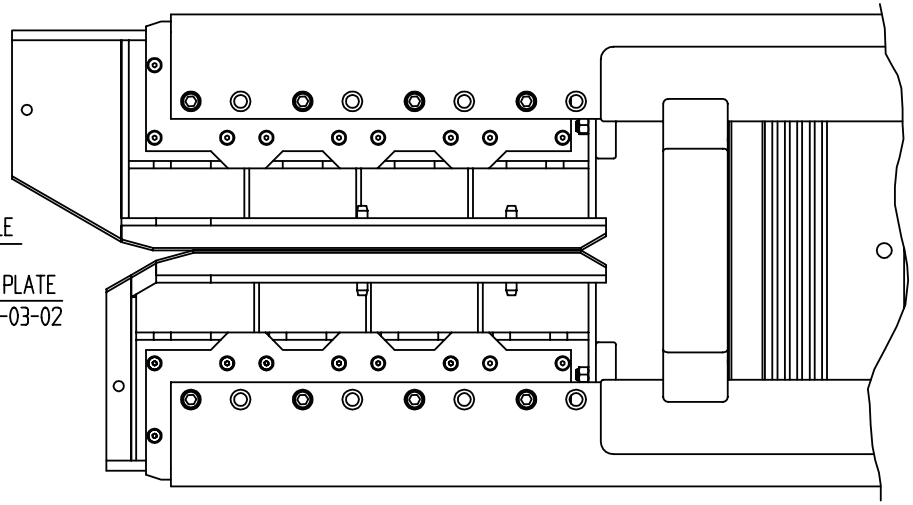

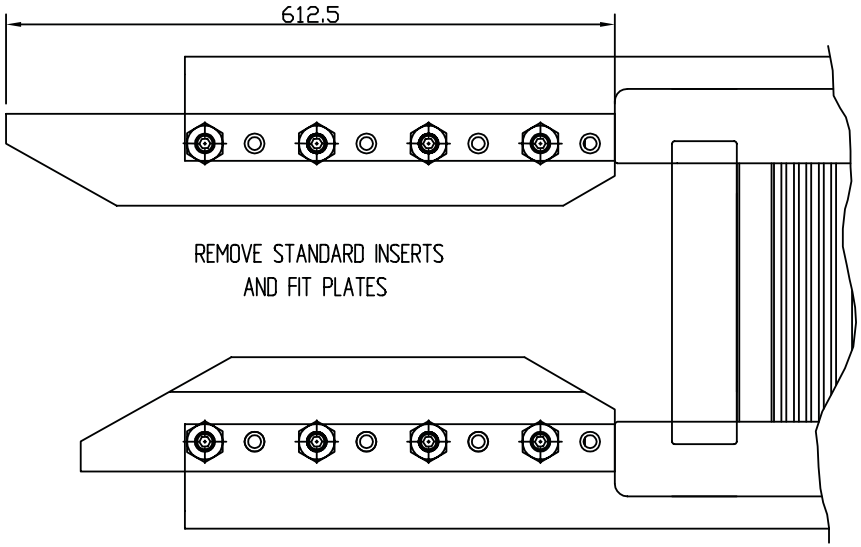

Ref.no.	Qnt.	Part name	Material	Dimension	Remark

Design by	Drawn at	Copied	Checked	Standard	Affirmed	Scale	Replace	Replaced by
M.D.B				A3				

DAWSON CONSTRUCTION PLANT LTD.

HPH 2400-MKII INSERT ARRANGEMENT ON CIRCULAR/SQUARE TIMBER PILES & TUBES

File name: 2tinttube - MKII

Date: 23-4-09

Drawing no.

3.7 PREVENTATIVE MAINTENANCE GUIDELINES FOR HPH 1200 & 2400 HYDRAULC HAMMERS, AND DIESEL ENGINED POWER PACKS

	DAILY OR REFUELLING	EVERY 125 HOURS	EVERY 250 HOURS	EVERY 500 HOURS	EVERY 1000 HOURS	EVERY 2000 HOURS
ENGINE	CHECK: . OIL LEVEL . COOLANT LEVEL . FAN - INSPECTION . DRIVE BELT - INSPECT . FUEL WATER TRAP - DRAIN		CHANGE: . LUBE OIL . LUBE FILTER CHECK: . AIR CLEANER . INTAKE SYSTEM . CHARGE AIR COOLER	CHANGE: . FUEL FILTER CHECK: . ANTI FREEZE	ADJUST: . VALVE LASH CLEARANCE CHECK: . FAN HUB . BELT TENSIONER BEARING . BELT TENSION	CHANGE: . ANTI FREEZE CHECK: . DAMPER
POWER PACK	CHECK: . HYDRAULIC OIL LEVEL . AIR INLET/OUTLETS FREE FROM OBSTRUCTION . CONDITION OF LIFTING POINTS & SLINGS/ SHACKLES . TEST DIAGNOSTIC LEDS . INSPECT GAUGES . CONDITION OF QUICK RELEASE COUPLINGS	CHECK: . FOR HYDRAULIC OIL LEAKS & RECTIFY . CONDITION OF HOSES . TIGHTNESS OF FASTENERS . CONDITION OF PAINTWORK . BATTERY WATER LEVEL . FUNCTION OF PENDANT & CONDITION OF CABLE	CHECK: . BATTERY CHARGING CHANGE: . HYDRAULIC OIL/FUEL FILLER FILTERS	CHECK: . PRESSURE OUTPUT OF PUMP . FLOW OUTPUT OF PUMP CHANGE: . PRESSURE/RETURN HYDRAULIC FILTERS	CHECK: . CONDITION OF WIRING . DRIVE COUPLING FOR WEAR . CONDITION OF EXHAUST CHANGE: . HYDRAULIC OIL AND CLEAN OUT SYSTEM	
HAMMER	CHECK: . ALL EXTERNAL FASTENERS FOR TIGHTNESS . DOLLY CONDITION . SUSPENSION BLOCK & SUSPENSION RING CONDITION . LIFTING POINT CONDITION . SERVICEABILITY OF SLINGS/SHACKLES MUST: . GREASE HAMMER FREQUENTLY	CHECK: . TIGHTNESS OF ALL HOSES, FITTINGS AND FASTENERS INSIDE HAMMER . CONDITION OF BOTH SENSORS . WEAR LEVEL ON LEG INSERTS	CHECK: . . ACCUMULATOR NITROGEN PRECHARGE PRESSURES . HAMMER FILTER CHANGE: . RESILIENT WASHERS BETWEEN DROP WEIGHT & HYDRAULIC RAM ON HPH 2400 ONLY	CHECK: . TIGHTNESS OF ACCUMULATORS . CONDITION OF MAIN FEED HOSES TO HAMMER CHANGE: . RESILIENT WASHERS BETWEEN DROP WEIGHT AND HYDRAULIC RAM	CHECK: . PLAY IN MAIN RAM ANCHORAGE ASSEMBLY . CONDITION OF ANVIL . PLAY BETWEEN DROP WEIGHT AND CASING BORE	
		TEST RUN ON PILE 15 MINUTES BEFORE AND AFTER CHECKING	TEST RUN ON PILE 15 MINUTES BEFORE AND AFTER CHECKING	TEST RUN ON PILE 30 MINUTES BEFORE AND AFTER CHECKING	TEST RUN ON PILE 30 MINUTES BEFORE AND AFTER CHECKING	TEST RUN ON PILE 30 MINUTES BEFORE AND AFTER CHECKING

(FOR FULL DETAILS SEE SECTIONS 4 AND 5 IN THE HAMMER MANUAL AND THE CUMMINS SERVICE MANUAL)

HAMMER MAINTENANCE (SEE APPENDIX 7.1)

4.1 Daily maintenance checks (or every 10 hours)

a. Apply Lithium based general purpose grease to hammer through each one of five grease points (part 1-057-00-01). Twenty operations of a grease gun on each grease point every shift will be adequate.

b. Check all external fasteners for tightness and re-tighten where necessary.

c. Check that the dolly (part 2-006-00-06) has not been damaged or worn beyond its serviceable limit. If the dolly is replaced, ensure that the O' ring is replaced with it (part 2-067-00-01).

To inspect the dolly, remove sixteen screws (part 2-034-00-01) and drop the leg inserts (2-019-00-01 and 2-020-00-01) down far enough to view the dolly. If the dolly is compressed past it's serviceable limit or if the dolly is cracked in many places replace it. Please refer to figure 4.1 for guidance on acceptable dolly wear.

To replace the dolly insert a steel bar through one of the holes in the bottom of the anvil (part 2-005-00-01) and drive the old dolly out using a hammer. Insert a new dolly (complete with O' ring) ensuring that it is pushed fully home.

d. Check the suspension blocks (part 2-025-00-01) and suspension ring (part 2-024-00-5) for wear/damage and replace if necessary. These must be in good condition at all times. These items act as the hammers 'suspension system' reducing the shock transmitted from the blow to the hammer and its components - **very important** for keeping the hammer functioning correctly.

e. Check the condition of lifting tackle and lifting points prior to being taken into service.

4.2 Planned 125 hour maintenance checks (run the hammer for 15 minutes before and after this maintenance work)

Every 125 hours the following work should be carried out in addition to that described in 4.1 above:-

a. Remove each hammer leg guide in turn and check the condition and tightness of: all hydraulic hoses and fittings; bolts; locking rings, and visually check all components for condition.

b. Check the condition of leg inserts to ensure correct fitting on pile sections. The inner faces of each insert should touch the opposite insert. If not, the wear faces may require building up with hard facing.

FIG. 4.1

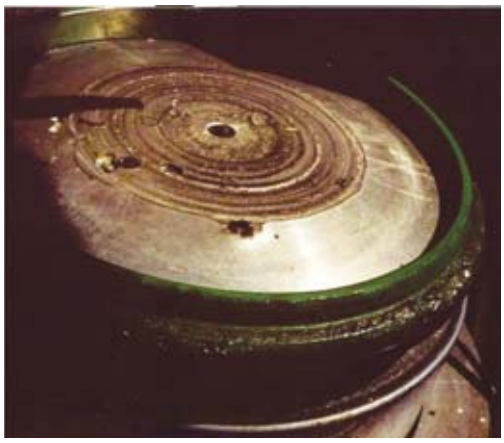

Debris embedded in dolly, remove debris and continue.

Severely cracked 6500 dolly should be replaced.

Overworked 6500 dolly stuck in anvil body, must be replaced or it can cause the anvil body to break.

If dolly is not replaced when it has been overworked, the anvil body can break due to expansion of dolly material.

4500 dolly starting to show signs of cracks after 150hrs of piling. OK but if cracks extend to the outer edge or the underside of the dolly, it must be changed.

View showing underside of 4500 dolly after 150 hrs of work.
No signs of cracking. OK.

3RD ANGLE

Rt.nr	Qnt.	Revision	Date	Intro.	Apprby

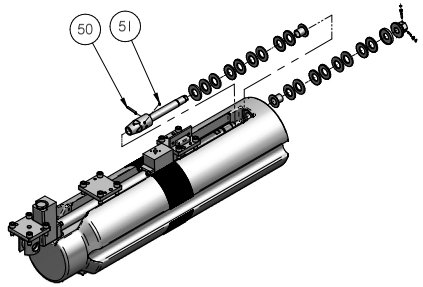

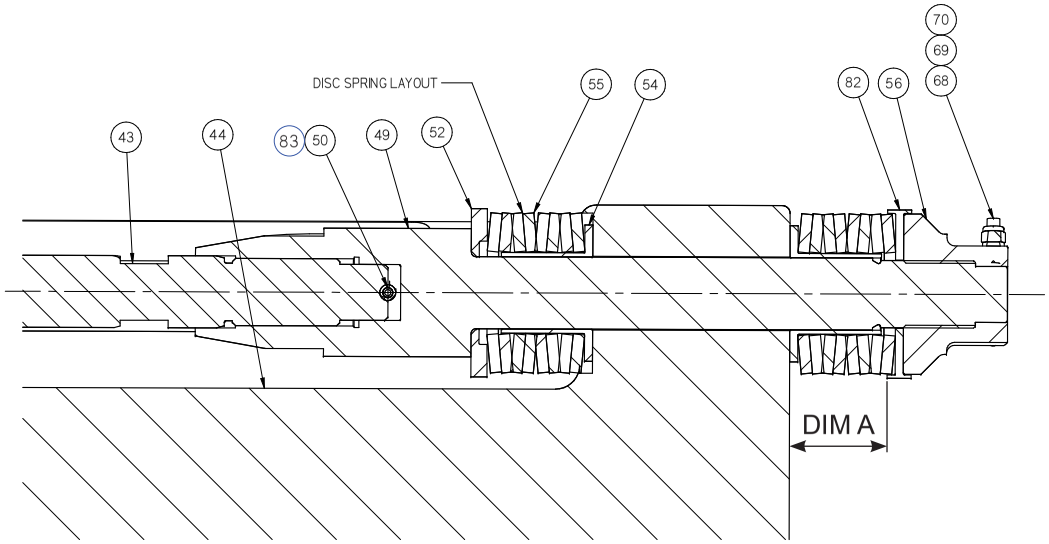

SECTION A-A

Ref.no.	Qnt.	Part name	Material	Dimension	Remark
83	1	SPRING PIN	TYPE SS	Dia.6 x 70	0M06-070-02
82	1	DISC SPRING BUFFER SPACER			2-012-00-04
70	3	DOG POINT SKT SET SCREW		M8 x 30	2-088-00-01
69	3	ANTI-VIBRATION WASHER PAIR	NORD-LOCK	M8	0M08-000-27
68	3	NYLOC NUT		M8	0M08-000-11
56	1	CONNECTOR NUT			2-011-00-03
55	16	DISC SPRING			2-022-00-01
54	2	DISC SPRING GUIDE BUSH			2-015-00-02
52	1	DISC SPRING BUFFER WASHER			2-010-00-05
51	2	CONE POINT SKT SET SCREW		M10 x 12	0M10-012-17
50	1	COMPOUND PIN TO DIN 1481	TYPE SS	Dia.10 x 70	0M10-070-22
49	1	RAM CONNECTOR			2-009-0-04
44	1	DROP WEIGHT			2-001-00-01
43	1	HYDRAULIC RAM			2-008-00-03

NOTES:
FIT THE RAM CONNECTOR (ITEM 49) TO THE HYDRAULIC RAM (ITEM 43). DRILL THROUGH THE RAM CONNECTOR Dia.10 AT 45 Deg. TO THE M10 HOLES AT A DISTANCE OF 120 MILLIMETERS FROM THE TAPERED END OF THE RAM CONNECTOR ENSURE THE SLOTS OF THE 2 PINS (ITEMS 50 & 83) ARE STAGGERED BY 180 Deg.
CLEAN THE M10 HOLES OF THE RAM CONNECTOR AND THE 2 CONE POINT SOCKET SET SCREWS (ITEM 51) WITH LOCTITE 7063. ALLOW TO DRY FOR 2-3 MINUTES.
APPLY LOCTITE ACTIVATOR 7471 TO THE AREAS PREVIOUSLY CLEANED AND ALLOW TO DRY FOR 2-3 MINUTES.
APPLY LOCTITE STUDLOCK 270 TO THE M10 HOLES IN THE RAM CONNECTOR AND INSTALL THE CONE POINT SET SCREWS TIGHTENING TO A TORQUE OF 36Nm REMOVE ANY EXCESS LOCCTITE..
ASSEMBLE THE DISC SPRINGS & OTHER COMPONENTS AS SHOWN ENSURING THAT ALL ITEMS ARE COATED WITH EP MOLY GREASE - PARTICULARLY THE DISC SPRINGS
DIM A (NUT FULLY TIGHTENED) - DIM A (NUT HAND TIGHT @ 45Nm/33 ft.lbs) - 2.5mm
CLEAN, ACTIVATE AND APPLY STUDLOCK AS PREVIOUSLY WHEN ASSEMBLING ITEMS 68, 69 AND 70.
TORQUE TIGHTEN ITEM 70 TO 18 Nm ON ASSEMBLY / TORQUE TIGHTEN ITEM 68 TO 30 Nm ON ASSEMBLY.
THE RAM CONNECTOR AND CONNECTOR NUT ARE NOT INTERCHANGEABLE WITH EARLIER VERSIONS i.e 2-009-00-03 AND 2-011-00-02 THE RAM CONNECTOR AND CONNECTOR NUT MUST BE INSTALLED AS A PAIR

SURFACE FINISH UNLESS STATED OTHERWISE	MACHINING TOLERANCES UNLESS STATED OTHERWISE
▽ ROUGH MACHINE N9	X = +/- 0.5
▽▽ FINE MACHINE N8	X . X = +/- 0.25
▽▽▽ GRIND N6	X . XX = +/- 0.05
	ANGLES +/- 0.5°
	DIMENSIONS IN MILLIMETERS

Design by	Drawn by	Copied	Checked	Standard	Affirmed	Scale	Replace	Replaced by
MDB	MDB	-	-	A2	-	-	-	-

DAWSON CONSTRUCTION PLANT LTD.

Hammer 2400 MKII
General Assembly With Leg Inserts

Sheet 1 of 1
Date 30/06/2009
Drawing no. 2-000-00-02

4.3 Planned 250 hour maintenance checks (run the hammer for 15 minutes before and after this maintenance work)

Every 250 hours the following work should be carried out in addition to the work described in 4.1 and 4.2 above:

4.3.1 Change the Disc Springs

The flexible coupling between the main hydraulic ram and the drop weight must be changed. The procedure is quite straightforward (see figure 5). Failure to do this will result in an expensive repair.

a. Lay the hammer on stable level ground on its Front Leg Guide packed on timbers. Remove the Rear Leg Guide (part 2-002-00-01).

b. Remove the 3 no. Nyloc Nuts, Dog Point Grub Screws and Anti-Vibration Washers (parts 6945, 2-088-00-01 and 2-089-00-01) from the Connector Nut (part 2-011-00-03). It may require a little heat to melt the Loctite on the grub screws.

c. Unscrew the Connector Nut from the Ram Connector (part 2-009-00-04) and remove the Nut together with the top stack of Disc Springs (2-022-00-01), Guide Bush (2-015-00-02) and Buffer Spacer (2-012-00-04).

d. Retract the piston rod of the Hydraulic Ram from the Drop Weight by hand and remove the other Disc Spring stack.

e. Inspect the removed steel components for wear and replace those with signs of fretting or bruising. Dispose of the old Disc Springs if there are any signs of radial cracking or unusual wear - do not reuse them if in doubt.

f. Ensure the Connector Nut threads are clean and fully degreased.

Pay particular attention to de-greasing the Grub Screws threads and the Grub Screws as this will ensure the Loctite adhesive works correctly.
Failure to do this correctly may result in the assembly working loose!

g. Re-assemble the connection as in figure 5 ensuring the new Disc Springs are installed in pairs using adequate EP Moly grease. Coat the Guide Bushes and Washers with EP Moly grease on all contact faces. Tighten the Connector Nut until it is hand tight, approximately 45 Nm (33ft.lbs). Tighten the Connector Nut further using a socket until the top Buffer Spacer is compressed by 2.5mm. Align a Dog Point Grub Screw hole in the Connector Nut with one of the axial slots in the Ram Connector thread. This may require the Nut to be tightened slightly further.

h. Install the 3 no. Dog Point Grub Screws using some Loctite 270 Studlock thread adhesive, and fully tighten each in turn to the torque quoted on Figure 5. Next install the pairs of anti-vibration washers onto each grub screw and lock the grub screws using new Nyloc nuts.

i. Re-assembly the Rear Leg Guide on the hammer. The unit is now ready for running.

4.3.2 Other items

a. Check the accumulator (part 1-048-00-04) precharge pressures using the gas pressure checking kit and a bottle of nitrogen gas. The precharge pressures are:-

High pressure -100 bar (two accumulators)
Low pressure - 3 bar (two accumulators)

To gain access to the accumulators it is necessary to remove the top cover (part 2-017-00-01). The two high pressure accumulators are on the left hand side viewed from the inlet manifold. To check the precharge pressures see appendix 7.2 in this manual.

4.4 Planned 500 hour maintenance checks (run the hammer for 30 minutes before and after this maintenance work)

Besides work mentioned in 4.1, 4.2 and 4.3 above the following work should be carried out:-

a. Tightness of the Accumulator assemblies.

b. Condition of the main feed hoses between the hammer and power pack. Hoses with excessive amount of “braiding” exposed or damaged should be replaced.

4.5 Planned 1000 hour maintenance checks (run the hammer for 30 minutes before and after this maintenance work)

Check the following:-

a. Play in the main ram anchorage assembly.

b. Condition of the Anvil.

c. Play between the Drop Weight and Casing bore.

Note: It is strongly recommeded that in order to achieve thorough and correct maintenance of this equipment that customer’s service personnel should be fully trained by the manufacturer.

POWER PACK MAINTENANCE

5.1 Power pack specification

5.1.1 Basic specification

Engine power output - 93 kW @ 2100 rpm

Engine maximum r.p.m. - 2300

Hydraulic flow output - 150 l/min

Max hydraulic pressure output - 230 Bar

Dimensions (l x w x h) - 2850 x 1340 x 2260mm

Weight - 3000 kg

5.1.2 Lubrication specification

Hydraulic oil type - Fina Hydran LZ 32 or equivalent

Hydraulic oil capacity - 360 litres

Diesel engine oil type - 15 W 40

Diesel engine oil capacity - 9.5 litres (incl. filter)

Diesel fuel type - DIN 51601-DK

Diesel fuel capacity - 275 litres

5.2 Daily maintenance checks (for full details of diesel engine maintenance see Cummins service manual)

a. Check hydraulic oil level - must be visible in sight glass, but not over half way in sight.

b. Check diesel lubrication oil level.

c. Ensure pump isolator valve is fully open.

d. Ensure air inlet/outlet panels are free from obstruction.

e. Drain water from diesel water trap.

f. Inspect lifting tackle and lifting points before being put into service.

g. Check function of diagnostic L.E.D.'s by pressing test button.

h. Check function of gauges.

i. Check condition of quick release couplings.

j. Check engine coolant level.

k. Check condition of fan and drive belt.

5.3 Planned maintenance checks

For full details of diesel engine maintenance see Cummins service manual and for power pack maintenance procedures see section 5.4.

5.3.1 Every 125 hours

Check the following:-

a. Hoses, pipework and fittings for any hydraulic oil leaks and rectify as required.

b. Tightness of all fasteners.

c. Condition of body panels and paint work. Touch-up where necessary.

d. Battery water level.

e. Condition and function of hand control pendant.

5.3.2 Every 250 hours

Check the following:-

a. Engine air cleaner.

b. Engine intake system

c. Engine charge air cooler.

d. Battery charging rate.

Change the following:-

e. Engine oil.

f. Engine oil filter.

g. Hydrauic oil filling filter.

h. Diesel fuel filling filter.

5.3.3 Every 500 hours

Check the following:-

a. Anti freeze in engine coolant.

b. Pump output flow rate and working pressure.

Change the following:-

c. Fuel filter.

d. Hydraulic oil pressure and return filters.

5.3.4 Every 1000 hours

Check the following:-

a. Engine fan hub.

b. Engine belt tensioner bearing.

c. Engine belt tension.

5.3.4 Every 1000 hours (con't)

d. Adjust valve lash clearance on engine.

e. Condition of all wiring and tightness of electrical connectors.

f. Wear on hydraulic pump flexible coupling.

g. Condition of exhaust.

Change the following:-

h. System hydraulic fluid.

5.4 Maintenance procedures

NOTE: Before any of the following procedures are undertaken, the battery isolator switch must be switched off.

a. Changing fuel/hydraulic oil inlet filler elements.

(i) Replacement element
(ii) Remove filter bowl
(iii) Remove and discard filter element (do not clean)
(iv) Wash bowl thoroughly
(v) Fit replacement element into bowl
(vi) Re-assemble filter
(vii) Prime hand pump

b. Changing hydraulic pressure filter element.

(i) Replacement element
(ii) Remove filter bowl
(iii) Remove and discard filter element (do not clean)
(iv) Wash bowl thoroughly
(v) Fit replacement element onto spigot
(vi) Fill filter bowl with clean hydraulic oil
(vii) Replace bowl O' ring if necessary
(viii) Re-assemble filter

c. Change hydraulic return filter element.

(i) Replacement element
(ii) Remove filter bowl
(iii) Remove and discard filter element (do not clean)
(iv) Wash bowl thoroughly
(v) Fit replacement element onto spigot
(vi) Fill filter bowl with clean hydraulic oil
(vii) Replace bowl O' ring if necessary
(viii) Re-assemble filter

5.4 Maintenance procedures (con't)

d. Pump removal/re-fitting.

(i) **IMPORTANT NOTE**
- the hydraulic pump should be returned to the manufacturer for repair/overhaul. This item must not be stripped or tampered with.

(ii) Isolate pump from hydraulic oil reservoir using pump isolator valve
(iii) Remove hoses from pump body
(iv) Remove mounting screws from front flange of pump
(v) Withdraw pump from coupling towards oil reservoir
(vi) Remove bellhousing from engine mounting flange
(vii) Reverse procedure for re-assembly
(viii) Fill case drain of pump with clean hydraulic oil prior to start up following removal from the system (port located on the top of the pump with adaptor fitted)

e. Cooler removal/re-fitting.

(i) Close pump isolator valve to prevent system syphoning
(ii) Remove flexible hoses from cooler
(iii) Remove mounting bolts from cooler
(iv) To remove matrix, remove top and bottom retaining strips from front of cooler and withdraw matrix from front of cooler assembly

f. Control valve assembly.

(i) Close pump isolator valve to prevent system syphoning
(ii) To replace solenoid coils remove plastic retainer from end of coil and withdraw coil from retaining tube
(iii) To replace valve assemblies remove 4 off retaining screws from top of valve and replace component as necessary

g. Pipework.

(i) For details of hose assemblies see hydraulic schematic drawing

(ii) In the event of steel pipe failure, 25mm 3 series fittings should be utilised in conjunction with 25mm bore x 3mm wall thickness tube

(iii) Welded pipe ends are currently utilised and should it become necessary to disturb these fittings a replacement O' ring should be used

h. Changing system hydraulic fluid

(i) Change hydraulic fluid
(ii) Remove cleanout cover and clean reservoir
(iii) Replace fuel inlet and hydraulic fluid inlet filter elements
(iv) Replace hydraulic pressure line filter element
(v) Replace hydraulic return line filter element
(vi) Blow through cooler matrix to clear
(vii) Replace solid pipe fitting O' rings as necessary
(viii) Replace tank cover gasket
(ix) Check all electrical connections for tightness
(x) Check drive coupling for wear and replace or adjust if necessary

5.5 Setting Procedures

a. Re-setting pressure
The pressure regulating adjuster is situated on the main control valve assembly. To adjust:

(i) Loosen the lock nut and wind the centre spigot counter clockwise to reduce pressure
(ii) Press the test button on the control panel to load the system
(iii) Turn the centre spigot clockwise to raise the system pressure
(iv) When the required pressure has been achieved (max 230 bar) tighten the lock nut

NOTE: Should the required pressure be exceeded, wind the adjuster back and increase again. Never wind the pressure downwards to set

b. Engine gauges replacement.

(i) There is a resistor fitted to all gauge power lines. This must be replaced after maintenance to prevent damage to the gauges.

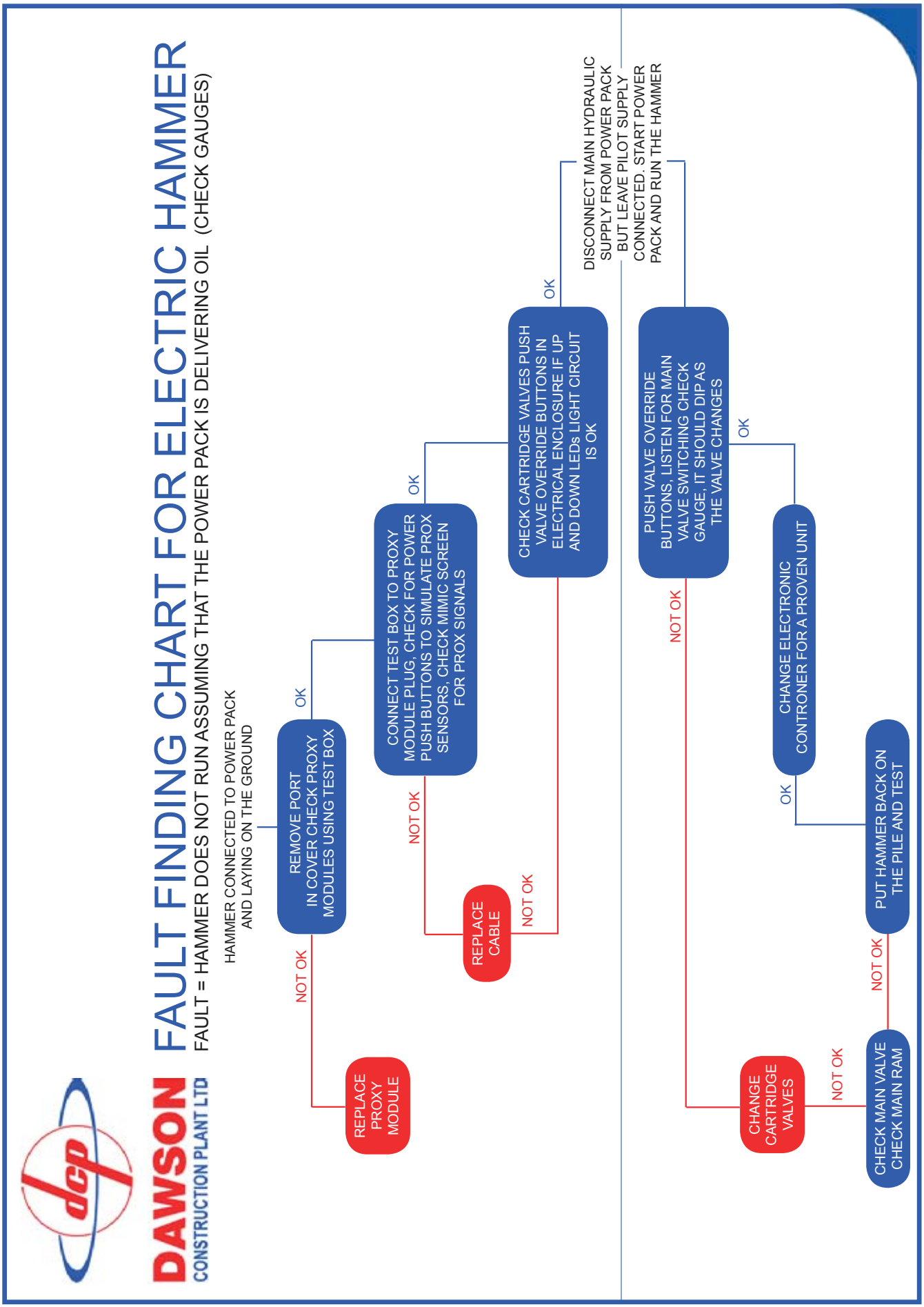
DAWSON
CONSTRUCTION PLANT LTD
FAULT FINDING CHART FOR ELECTRIC HAMMER
FAULT = HAMMER DOES NOT RUN ASSUMING THAT THE POWER PACK IS DELIVERING OIL (CHECK GAUGES)
HAMMER CONNECTED TO POWER PACK AND LAYING ON THE GROUND
REMOVE PORT IN COVER CHECK PROXY MODULES USING TEST BOX
OK
NOT OK
REPLACE PROXY MODULE
CONNECT TEST BOX TO PROXY MODULE PLUG, CHECK FOR POWER PUSH BUTTONS TO SIMULATE PROX SENSORS, CHECK MIMIC SCREEN FOR PROX SIGNALS
OK
NOT OK
REPLACE CABLE
NOT OK
CHECK CARTRIDGE VALVES PUSH VALVE OVERRIDE BUTTONS IN ELECTRICAL ENCLOSURE IF UP AND DOWN LEDs LIGHT CIRCUIT IS OK
OK
DISCONNECT MAIN HYDRAULIC SUPPLY FROM POWER PACK BUT LEAVE PILOT SUPPLY CONNECTED. START POWER PACK AND RUN THE HAMMER
PUSH VALVE OVERRIDE BUTTONS, LISTEN FOR MAIN VALVE SWITCHING CHECK GAUGE, IT SHOULD DIP AS THE VALVE CHANGES
OK
NOT OK
CHANGE ELECTRONIC CONTRONER FOR A PROVEN UNIT
OK
PUT HAMMER BACK ON THE PILE AND TEST
NOT OK
CHECK MAIN VALVE CHECK MAIN RAM
NOT OK
CHANGE CARTRIDGE VALVES

TROUBLESHOOTING

6.1 Power pack engine will not start	a.	Check battery condition.
	b.	Check diagnostics panel for fault LED showing (see fig. 2.)
6.2 Engine cuts out during running	a.	Check diagnostics panel for fault LED showing and rectify (see fig. 2.)
6.3 Power pack does not generate any pressure	a.	Check L.E.D. (11) to see if hydraulic oil is up to temperature (see figure 2). If not perform warm-up operation described in section 3.3.1.
	b.	Check operation of main valve in power pack by turning selector switch (5) to 'warm-up' on the instrumentation panel (fig. 2.) This gives 200 bar reading on pressure gauge.
	c.	Check fuses or electrical connections to valve block if no reading from (b).
	d.	Check operation of relief valve if no reading from (b).
	e.	Check operation of hand control pendant and fuses in electrical box if reading is O.K. in (b).
6.4 Power pack generates pressure but hammer does not run	a.	Anvil not pushed fully up into hammer casing (see section 3.4.1.) or the dolly is not sitting correctly in the anvil (especially after transportation or laying on its side)
	b.	Air in hammer hydraulic system - see section 3.4.2.
	c.	Hammer has been allowed to overtravel - see section 3.4.4. to reset.
	d.	Damaged hose on control side of hammer - check by removing front leg guide for inspection.
	e.	If all appears well the problem may be with the main control valve spool. Contact the manufacturer for further details.
6.5 Hammer will lift but not drop	a.	Has the hammer been allowed to overtravel. Check reset - see section 3.4.4.
	b.	Air in hammer hydraulic system - see section 3.4.2.
6.6 Hammer runs erratically	a.	Air in hydraulic system - see section 3.4.2.
	b.	'Cold' hydraulic oil - see section 3.4.4.
	c.	Accumulator pressures incorrect or bladders damaged. See Appendix 7.2. High pressure accumulator - 100 bar (2 off) Low pressure accumulator - 3 bar (2 off)
	d.	Blocked filter on hammer - see section 4.2.b.

FOR A QUICK FAULT FINDING GUIDE PLEASE SEE OVER LEAF

3RD ANGLE

Rev. nr.	Qnt.	Revision	Date	Intro.	Appr. by
A		ACCESS DOOR ADDED TO LEG GUIDE	16/11/11	MDB	

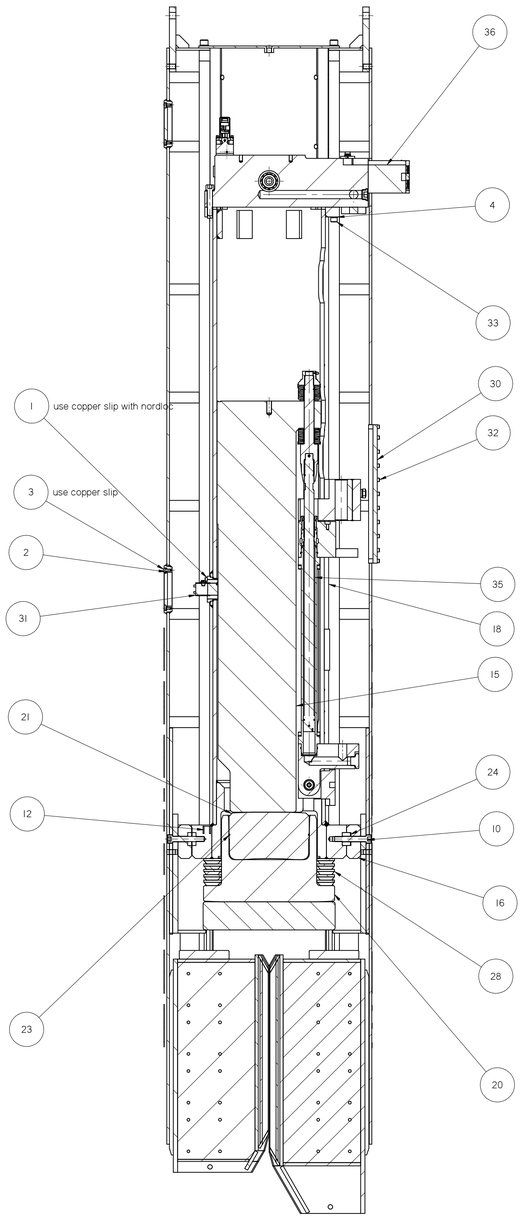

SECTION A-A

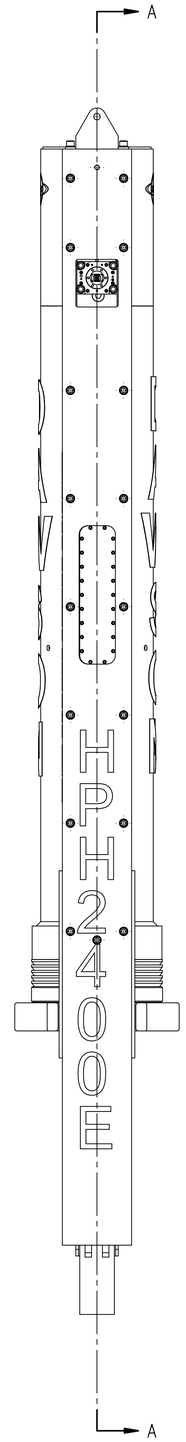

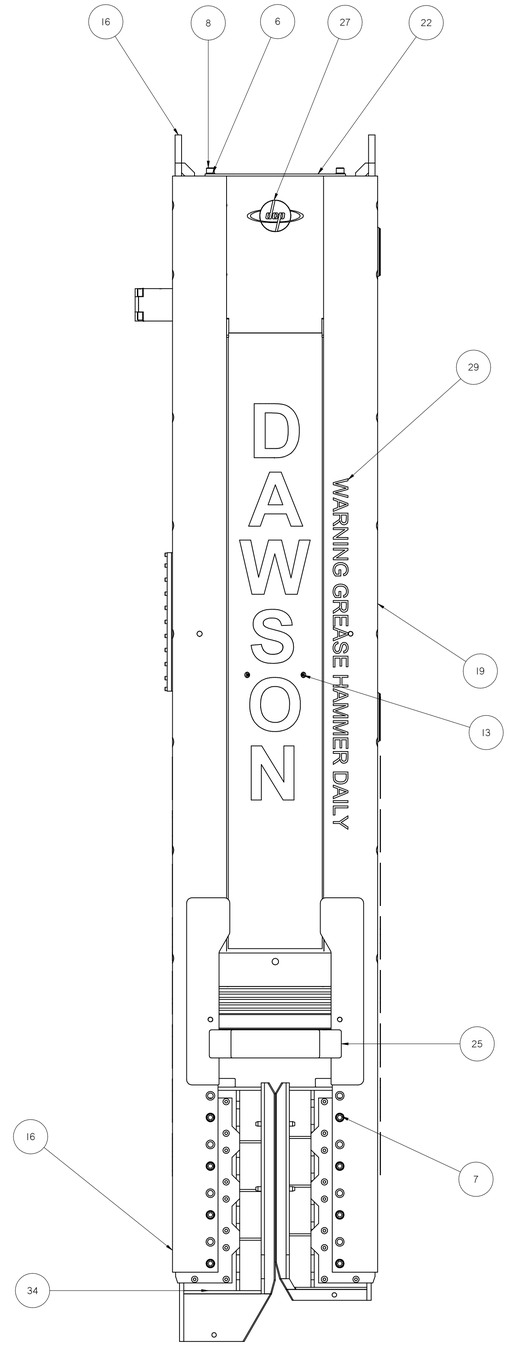

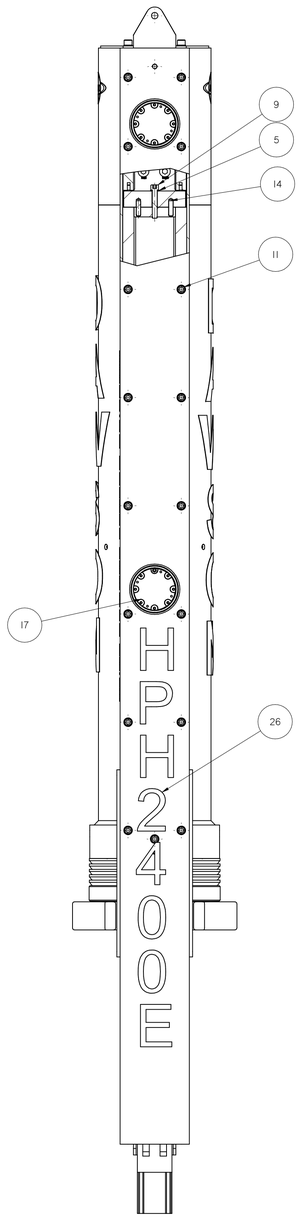

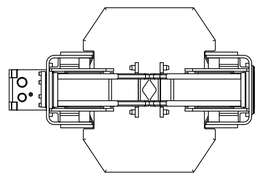

Ref.no.	Qnt.	Part name	Material	Dimension	Remark
36	1	VALVE ASSEMBLY			SA 2-018-00-01E
35	1	HYDRAULIC RAM ASSEMBLY			SA 2-008-00-01E
34	1	LEG INSERTS ASSEMBLY			SA 2-000-00-02E
33	1	SOCKET HEAD CAP SCREW			OM20-085-02
32	1	SOCKET HEAD CAP SCREW		M10x40	OM10-40-02
31	1	PROXIMITY MODULE			E0-1079-00-01
30	1	PORT HOLE PLATE			9.03100.01
29	1	GREASE HAMMER STICKER			6-200-06-01
28	1	SUSPENSION RING			45-024-30-01
27	1	DCP LOGO STICKER			2-201-00-01
26	1	HPH2400 STICKER			2-200-03-01
25	1	SPREADER PLATE	BS 4360 EN50B		2-100-03-02
24	1	HOLLOW BUSH	BS970 EN36B	Case Harden 0.75 Deep	2-099-00-01
23	1	O-RING	10362 x Φ5	204-962-44 70	2-067-00-02
22	1	TOP COVER			2-017-00-01
21	1	MKII HAMMER DOLLY	ALUMINIUM T6	CONDITION HE30TF	2-006-00-09
20	1	PRIMARY ANVIL	CAST STEEL	BT2	2-005-00-04
19	1	FRONT LEG GUIDE			2-004-00-02E
18	1	HAMMER CASING ELECTRONIC			2-003-00-03E
17	1	SENSOR INSPECTION COVER	EN43A		2-002-11-01
16	1	REAR LEG GUIDE			2-002-00-02
15	1	DROP WEIGHT			2-001-00-01E
14	1	SPECIAL DOWEL		DIA 21	1-086-00-01
13	1	GREASE NIPPLE		1/8" BSP	1-057-00-01
12	1	GUIDE BUSH			1-041-00-01
11	1	SOCKET HEAD CAP SCREW		M24x200	OM24-200-02
10	1	SOCKET HEAD CAP SCREW	12.9	M24 x 145 LG	OM24-145-02
9	1	SOCKET HEAD CAP SCREW	12.9	M24 x 130 LG	OM24-130-02
8	1	SOCKET HEAD CAP SCREW	12.9	M24 x 70 LG	OM24-070-02
7	1	SOCKET HEAD CAP SCREW	12.9	M24 x 70 LG	OM24-070-02
6	1	NORD-LOCK WASHER		M24	OM24-000-27
5	1	NORD-LOCK WASHER		M24	OM24-000-27
4	1	NORD-LOCK WASHER		M20	OM20.000.27
3	24	HEX HD BOLT		M10 x 25LG	OM10.025.01
2	24	SPRING WASHER		M10	OM10.000.21
1	12	SOCKET HEAD CAP SCREW	12.9	M10 x 25	OM10-025-02

SURFACE FINISH UNLESS STATED OTHERWISE	MACHINING TOLERANCES UNLESS STATED OTHERWISE
▽ ROUGH MACHINE N9	X = +/- 0.5
▽▽ FINE MACHINE N8	X . X = +/- 0.25
▽▽▽ GRIND N6	X . XX = +/- 0.05
	ANGLES +/- 0.5°
	DIMENSIONS IN MILLIMETERS

Design by	Drawn by	Copied	Checked	Standard	Affirmed	Scale	Replace	Replaced by
MDB	MDB	–	–	A0	–	–	–	–

DAWSON CONSTRUCTION PLANT LTD.

HPH2400E

GENERAL ASSEMBLY

Sheet 1 of 1 | Date 09/09/2010

Drawing no. GA 2-000-00-02

3RD ANGLE

Rf.nr	Qnt.	Revision	Date	Intro.	Appr.by
A		6MM SPRING PIN ADDED	27/06/12	MDB	
B		PART REVISION UPDATES	05/10/12	MDB	
C		NOTES ADDED	04/12/12	MDB	
D		GUIDE BUSH POSITIONS SHOWN	23/04/13	MDB	
E		ADD HOSE GUIDES	21/08/13	MDB	
F		ADD RAM SHOCKER/REMOVE HOSE GUIDES	24/03/14	MDB	

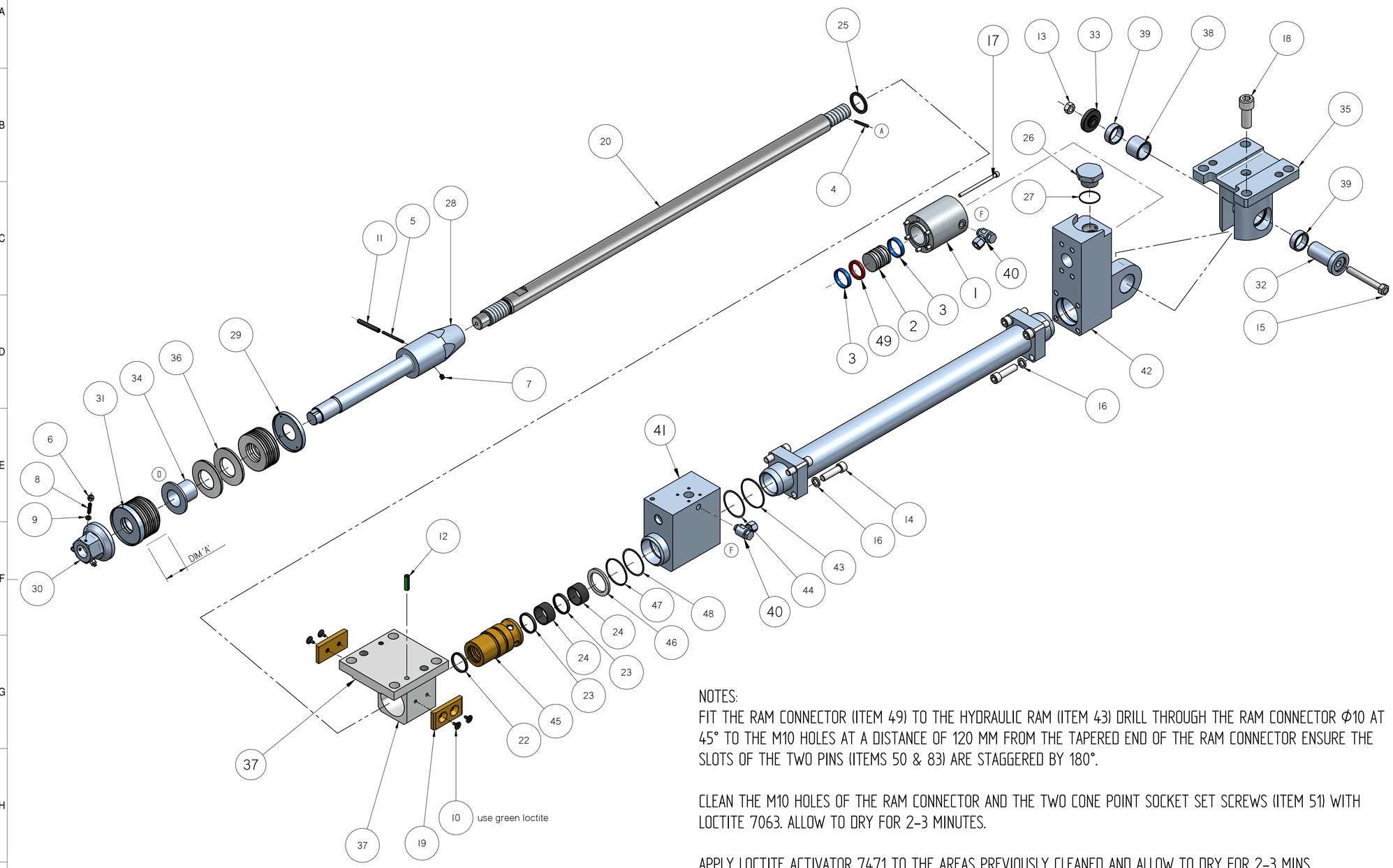

Ref.no.	Qnt.	Part name		Material	Dimension	Remark
49	1	SEAL		CLARON	CS50500/2B	
48	1	ANTI EXTRUSION RING			6-008-30-01	
47	1	O RING			6-008-29-01	
46	1	TOLERANCE WASHER			6-008-28-01	
45	1	PHOSPHER BRONZE			6-008-27-03	
44	1	ANTI-EXTRUSION RING			6-008-25-01	
43	1	O RING			6-008-24-01	
42	1	BOTTOM BLOCK			6-008-06-02	
41	1	HPH6500 HYDRAULIC RAM TOP BLOCK			6-008-05-04	
40	2	BANJO COUPLING			4216	
39	2	HARDENED INNER BUSH			2-098-00-01	
38	1	HARDENED INNER BUSH			2-097-00-01	
37	1	Ram Guide Block			2-032-00-02	
36	16	Disc Spring			2-022-00-01	
35	1	Ram Anchor			2-021-00-02	
34	2	DISC SPRING GUIDE BUSH			2-015-00-02	
33	1	PIN RETAINER			2-014-00-01	
32	1	LOWER RAM PIN			2-013-00-02	
31	1	DISC SPRING BUFFER WASHER			2-012-00-04	
30	1	CONNECTOR NUT			2-011-00-03	
29	1	DISC SPRING BUFFER WASHER			2-010-00-05	
28	1	RAM CONNECTOR - 4x2 DISC SPRING			2-009-00-04	
27	1	O RING			2-008-27-01	
26	1	PLUG			2-008-26-01	
25	1	PISTON SEAL (ROUGH)			2-008-23-01	
24	2	SLYD RING (ROUGH)			2-008-22-01	
23	2	ROD SEAL (ROUGH)			2-008-21-02	
22	1	EXCLUDER			2-008-20-01	
21	1	HYDRAULIC RAM BARREL			2-008-04-02	
20	1	HYDRAULIC RAM ROD			2-008-03-03.2	
19	2	WEAR PAD			1-015-00-01	
18	8	SOCKET HEAD CAP SCREW	12.9	M24 x 60 LG	0M24-060-02	
17	6	SOCKET HEAD CAP SCREW			0M16.170.02	
16	8	NORD-LOCK WASHER		M16	0M16.000.27	
15	1	HEX HD BOLT		M16 x 115 LG	0M16-115-01	
14	8	SOCKET HEAD CAP SCREW	12.9	M16 x 60 LG	0M16-060-02	
13	1	NYLOC NUT - TYPE T		M16	0M16-000-12	
12	2	SPRING PIN		⌀ 12 x 40 LG	0M12-040-22	
11	1	SPRING PIN		Φ10 x 70 LG	0M10-070-22	
10	4	CSK.SOC SET SCREW		M10 x 16 LG	0M10-016-03	
9	3	NORD-LOCK WASHER		M8	0M08.000.27	
8	3	DOG POINT SET SCREW		M8 x 30 LG	0M08-030-16	
7	2	CONE POINT SET SCREW	M8 x 10		0M08-010-17	
6	3	NYLOC NUT - TYPE T		M8	0M08-000-12	
5	1	SPRING PIN		Φ6 x 70 LG	0M06-070-22	
4	1	6MM SLOTTED SPRING PIN			0M06-045-22	
3	2	SHOCKER WEAR STRIP				
2	1	SHOCKER PISTON				
1	1	RAM SHOCKER				

NOTES:
FIT THE RAM CONNECTOR (ITEM 49) TO THE HYDRAULIC RAM (ITEM 43) DRILL THROUGH THE RAM CONNECTOR Φ10 AT 45° TO THE M10 HOLES AT A DISTANCE OF 120 MM FROM THE TAPERED END OF THE RAM CONNECTOR ENSURE THE SLOTS OF THE TWO PINS (ITEMS 50 & 83) ARE STAGGERED BY 180°.

CLEAN THE M10 HOLES OF THE RAM CONNECTOR AND THE TWO CONE POINT SOCKET SET SCREWS (ITEM 51) WITH LOCTITE 7063. ALLOW TO DRY FOR 2-3 MINUTES.

APPLY LOCTITE ACTIVATOR 7471 TO THE AREAS PREVIOUSLY CLEANED AND ALLOW TO DRY FOR 2-3 MINS.

APPLY LOCTITE STUDLOCK 270 TO THE M10 HOLES IN THE RAM CONNECTOR AND INSTALL THE CONE POINT SET SCREWS TIGHTENING TO A TORQUE OF 36 Nm, REMOVE ANY EXCESS LOCTITE.

ASSEMBLE THE DISC SPRINGS & OTHER COMPONENTS AS SHOWN ENSURING THAT ALL ITEMS ARE COATED WITH EP MOLY GREASE - PARTICULARLY THE DISC SPRINGS.

DIM A (NUT FULLY TIGHTENED) = DIM A (NUT HAND TIGHT @ 45Nm/33ft.lbs) - 2.5mm

CLEAN, ACTIVATE AND APPLY STUDLOCK AS PREVIOUSLY WHEN ASSEMBLING ITEMS 70,
TORQUE TIGHTEN ITEM 70 TO 18 Nm ON ASSEMBLY
TORQUE TIGHTEN ITEM 68 TO 30 Nm ON ASSEMBLY

THE RAM CONNECTOR AND CONNECTOR NUT ARE NOT INTERCHANGEABLE WITH EARLIER VERSIONS I.E. 2-009-00-03 AND 2-011-00-02. THE RAM CONNECTOR AND CONNECTOR NUT MUST BE INSTALLED AS A PAIR.

SURFACE FINISH	MACHINING TOLERANCES
UNLESS STATED OTHERWISE	UNLESS STATED OTHERWISE
▽ ROUGH MACHINE N9	X = +/- 0.5
▽▽ FINE MACHINE N8	X . X = +/- 0.25
▽▽▽ GRIND N6	X . XX = +/- 0.05
	ANGLES +/- 0.5°
	DIMENSIONS IN MILLIMETERS

Design by	Drawn by	Copied	Checked	Standard	Affirmed	Scale	Replace	Replaced by
MDB	MDB	-	-	A1	-	-	-	-

DAWSON CONSTRUCTION PLANT LTD.

HPH2400E
HYDRAULIC RAM ASSEMBLY

Sheet 1 of 2 | Date 09/09/2010
Drawing no. SA 2-008-00-01E

3RD ANGLE

Rf.nr	Qnt.	Revision	Date	Intro.	Appr.by
A	Qnt.	O-RING WAS Ø100 x 3.5mm CROSS SECTION WAS 3mm, Hollow dowels added to GA.	28/11/12		PLW
B		RE-ITEM PART NUMBERS	08/05/13		MDB
C		RE-ITEM PART NUMBERS	04/06/13		MDB

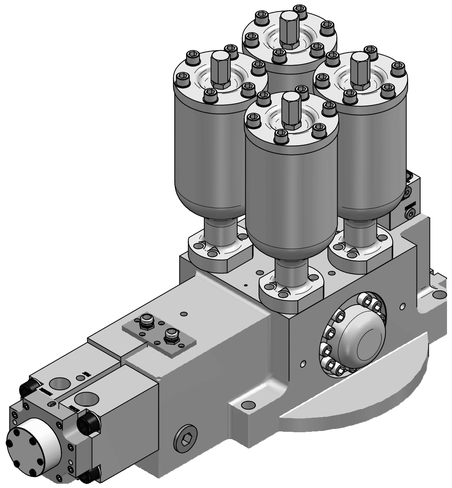

ASSEMBLED VIEW

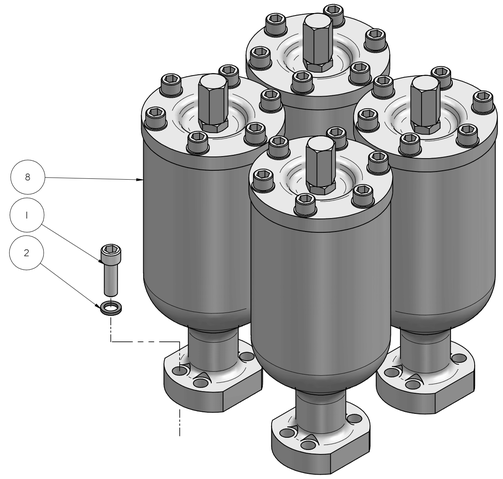

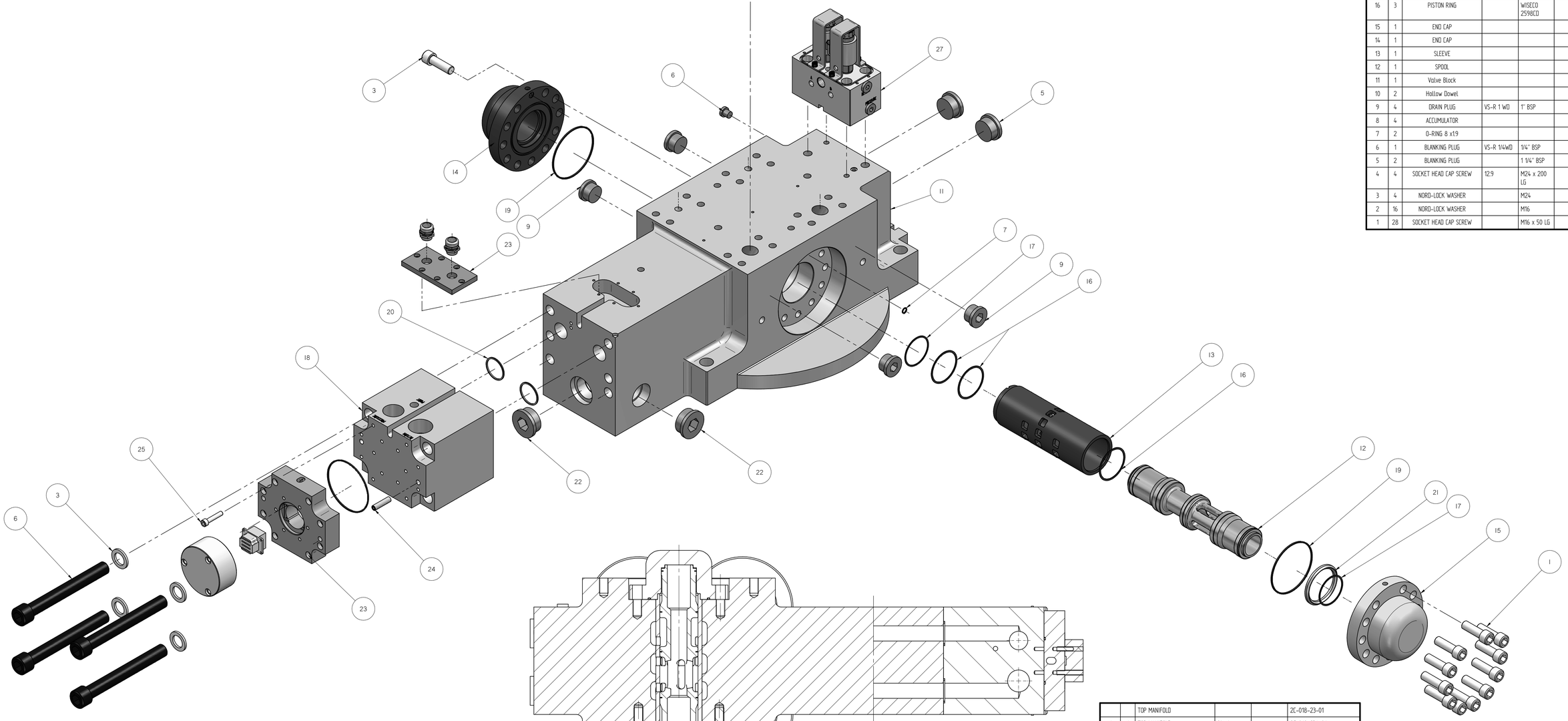

27	1	SUN MANIFOLD ASSEMBLY			SA 2-118-00-01E
26	6	SOCKET HEAD CAP SCREW		M8 x 60	0M10-100-02
25	15	SOCKET HEAD CAP SCREW			0M10-100-02
24	1	ROLL PIN			0M10-040.22
23	1	WIRING LOOM			E0-1124-00-01
22	2	1.5 BSP BLANKING PLUG		1.5 BSP	2-018-29-01E
21	1	TOLERANCE WASHER			2-018-27-01E
20	2	40x3 O-RING			2-018-26-01
19	2	100 x 3.5 O-RING			2-018-25-01E
18	1	INLET MANIFOLD			2-018-23-03E
17	2	PISTON RING		WISECO 2402CD	2-018-15-01
16	3	PISTON RING		WISECO 2598CD	2-018-13-01
15	1	END CAP			2-018-05-02E
14	1	END CAP			2-018-04-02E
13	1	SLEEVE			2-018-03-02E
12	1	SPOOL			2-018-02-05E
11	1	Valve Block			2-018-01-01E
10	2	Hollow Dowel			18-018-31-00
9	4	DRAIN PLUG	VS-R 1 WD	1" BSP	1-064-00-01
8	4	ACCUMULATOR			1-048-00-06
7	2	O-RING 8 x19			1-018-20-01
6	1	BLANKING PLUG	VS-R 1/4WD	1/4" BSP	1-018-18-01
5	2	BLANKING PLUG		1 1/4" BSP	1-018-07-01
4	4	SOCKET HEAD CAP SCREW	12.9	M24 x 200 LG	0M24-200-02
3	4	NORD-LOCK WASHER		M24	0M24-000-27
2	16	NORD-LOCK WASHER		M16	0M16.000.27
1	28	SOCKET HEAD CAP SCREW		M16 x 50 LG	0M16-050-02

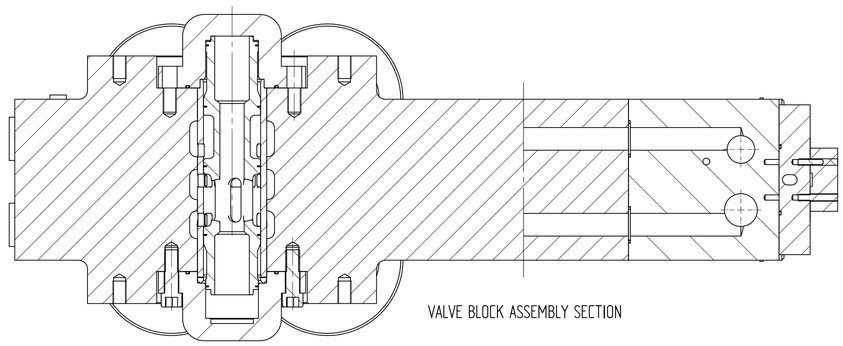

VALVE BLOCK ASSEMBLY SECTION

		TOP MANIFOLD			2C-018-23-01
1	1	TOP MANIFOLD	Steel		2C-018-23A-01
2	2	TRANSFER MANIFOLD	Steel		2C-018-23A-01
3	1	SOCKET FLANGE	Steel		2C-018-23B-01
4	24	SEALING TUBE	Steel		2C-018-23D-01

SURFACE FINISH UNLESS STATED OTHERWISE	MACHINING TOLERANCES UNLESS STATED OTHERWISE
▽ ROUGH MACHINE N9	X = +/- 0.5
▽▽ FINE MACHINE N8	X . X = +/- 0.25
▽▽▽ GRIND N6	X . XX = +/- 0.05
	ANGLES +/- 0.5°
	DIMENSIONS IN MILLIMETERS

Ref.no.	Qnt.	Part name	Material	Dimension	Remark
Design by SDD	Drawn by SDD	Copied	Checked –	Standard A0	Affirmed –	Scale –	Replace –	Replaced by –
dcp	DAWSON CONSTRUCTION PLANT LTD.	VALVE ASSEMBLY			File –	Date 09/09/2010
					Drawing no. SA 2-018-00-01E	

3RD ANGLE

Rf.nr	Qnt.	Revision	Date	Intro.	Appr.by
A		CHANGE SOLENOID PART No.	21/02/12	MDB	
B		CHANGE M6x85 > M6x80	04/05/16	MDB	

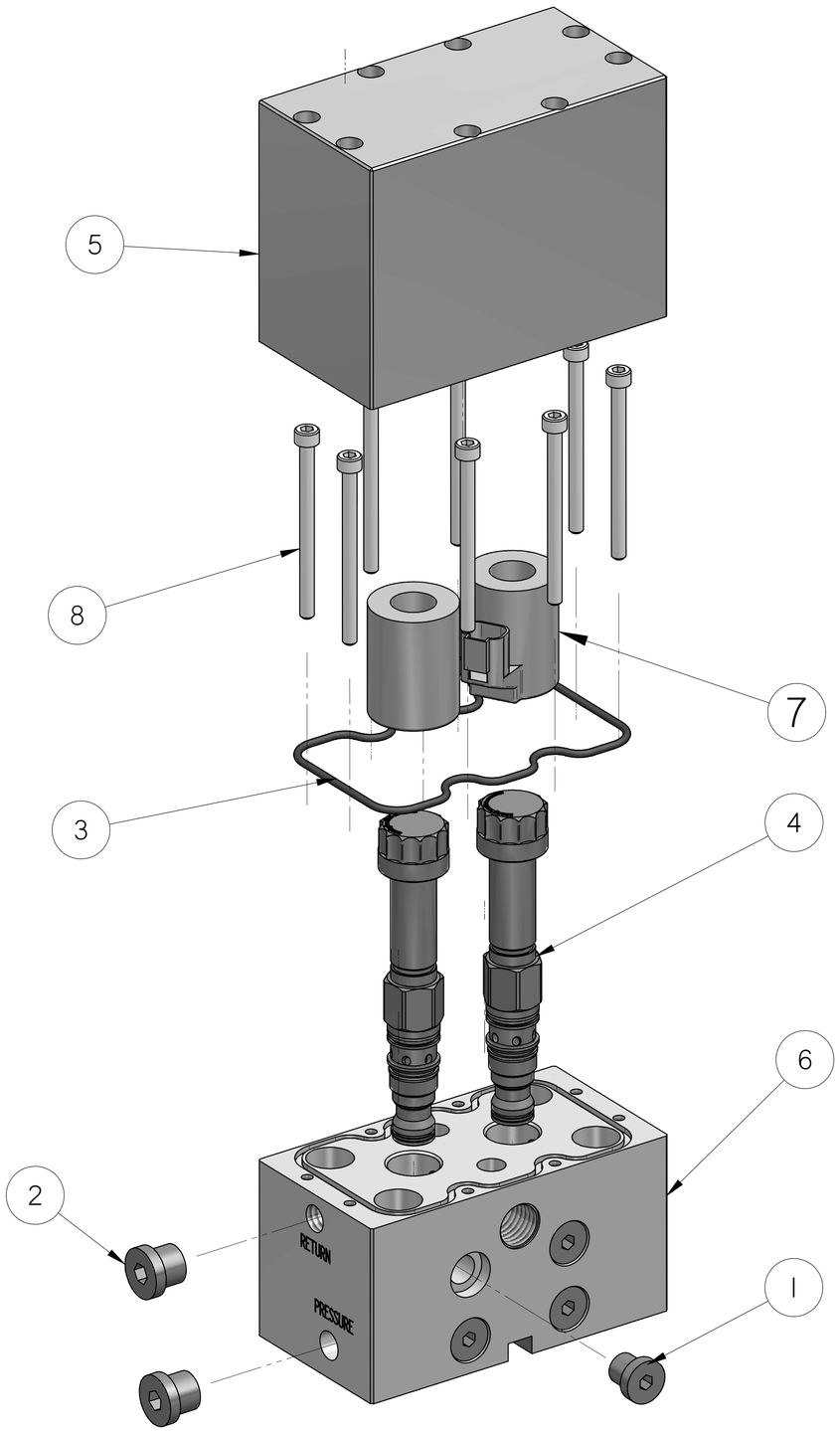

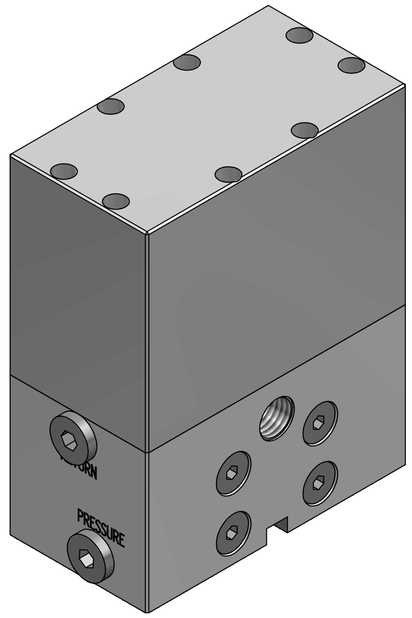

ASSEMBLED ISO VIEW

Ref.no.	Qnt.	Part name	Material	Dimension	Remark
8	8	SOCKET HEAD CAP SCREW			OM10-80-02
7	2	SOLENOID			E0-1093-00-01
6	1	VALVE INTERFACE BLOCK			2-018-37-01E
5	1	COVER			2-018-36-01E
4	2	CARTRIDGE VALVE			2-018-06-01E
3	1	O-RING SEAL			2-018-032-01
2	2	BLANKING PLUG	VS-R 3/8 WD	3/8" BSP	1-018-28-01
1	4	BLANKING PLUG	VS-R 1/4WD	1/4" BSP	1-018-18-01

SURFACE FINISH
UNLESS STATED OTHERWISE
▽ ROUGH MACHINE N9
▽▽ FINE MACHINE N8
▽▽▽ GRIND N6

MACHINING TOLERANCES
UNLESS STATED OTHERWISE
X = +/- 0.5
X . X = +/- 0.25
X . XX = +/- 0.05
ANGLES +/- 0.5°
DIMENSIONS IN MILLIMETERS

Design by	Drawn by	Copied	Checked	Standard	Affirmed	Scale	Replace	Replaced by
peter watt	peter watt	–	–	A3	–	–	–	–

DAWSON CONSTRUCTION PLANT LTD.

SUN MANIFOLD ASSEMBLY
UNDER WATER SET UP

File –
Date 03/04/2012
Drawing no. SA 2-118-00-01E

3RD ANGLE

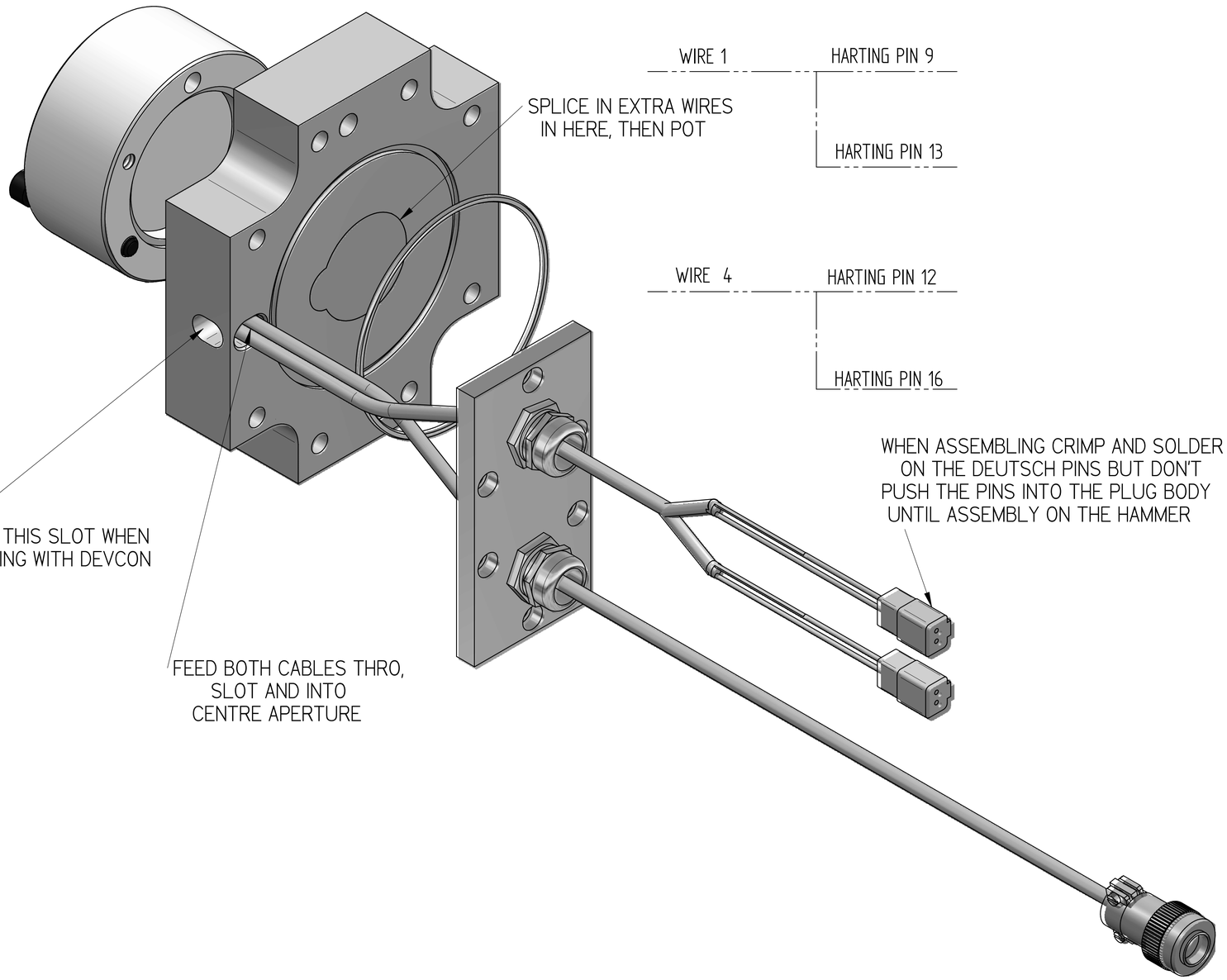

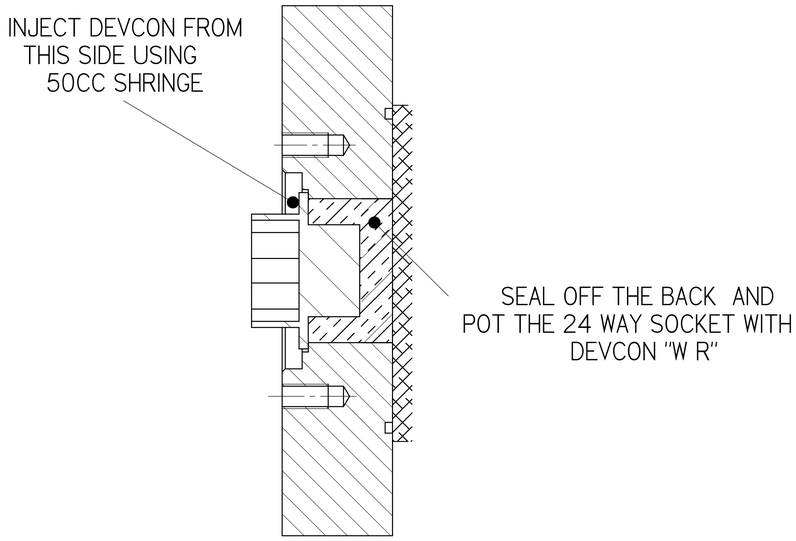

SECTION B-B

WIRING DETAILS						
24 WAY HARTING PIN NUMBER	CABLE 4 WAY, WIRE NUMBER	CABLE 7 WAY WIRE NUMBER	DEUTSCH 1 PIN NUMBER	DEUTSCH 2 PIN NUMBER	10 WAY ITT PIN NUMBER	FUNCTION
5	1		1			UP VALVE
6	2		2			UP VALVE
7	3			1		DOWN VALVE
8	YELLOW-GREEN			2		DOWN VALVE
9		1			A	
10		2			F	
11		3			E	
12		4			D	
13		1			A	
14		6			B	
15		5			C	
16		4			D	

NOTE
ON THE 7 WAY CABLE
SPLICE AN EXTRA WIRE INTO WIRE 1 SO THAT HARTING PINS 9 AND 13 BOTH GO TO WIRE 1
SAME ON WIRE 4, GOES TO HARTING PINS 12 AND 16.
SOLDER AND HEAT SHRINK TO NEW WIRES INTO THE EXISTING WIRES
THE SOLDERED JOINTS WILL LATER BE POTTED WITH DEVCON WR.
WIRES TO BE CRIMPED AND SOLDERED IN 24 WAY HARTING

Rf.nr	Qnt.	Revision	Date	Intro.	Appr.by

SURFACE FINISH
UNLESS STATED OTHERWISE
▽ ROUGH MACHINE N9
▽▽ FINE MACHINE N8
▽▽▽ GRIND N6

MACHINING TOLERANCES
UNLESS STATED OTHERWISE
X = +/- 0.5
X . X = +/- 0.25
X . XX = +/- 0.05
ANGLES +/- 0.5°
DIMENSIONS IN MILLIMETERS

Ref.no.	Qnt.	Part name		Material		Dimension	Remark	
Design by STEVE	Drawn by STEVE	Copied –	Checked –	Standard A1	Affirmed –	Scale –	Replace –	Replaced by –
DAWSON CONSTRUCTION PLANT LTD.		WIRING LOOM					File –	Date 08/05/2012
							Drawing no. E0-1124-00-01	

Rf.nr	Qnt.	Revision	Date	Intro.	Appr.by

3RD ANGLE

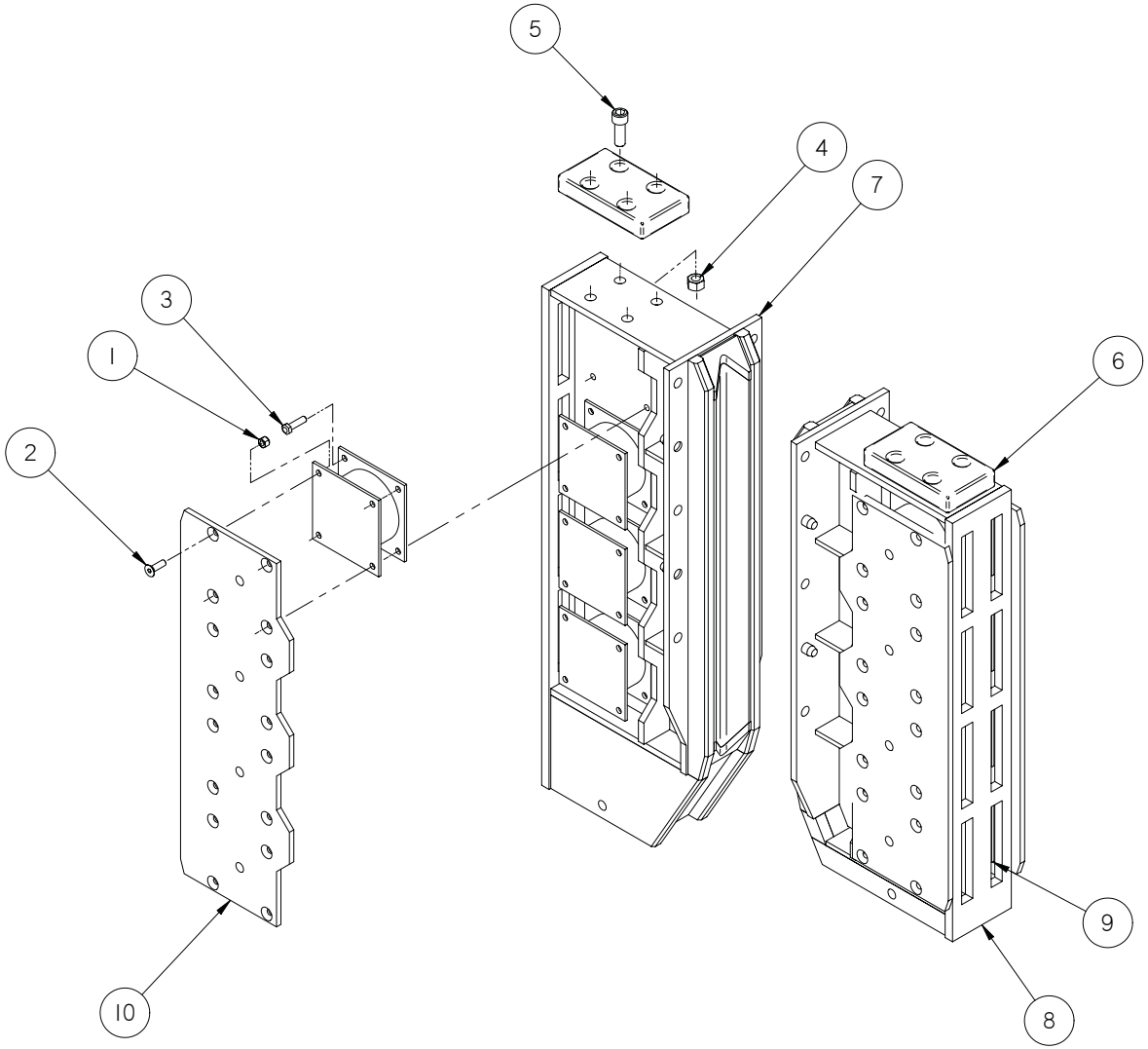

Ref.no.	Qnt.	Part name	Material	Dimension	Remark
10	4	Location Plate			2-042-00-03
9	16	SANDWICH MOUNT			2-033-00-02
8	1	Rear Leg Insert			2-020-00-01
7	1	Front Leg Insert			2-019-00-01
6	2	BUFFER BLOCK			1-040-00-02
5	8	SOCKET HEAD CAP SCREW	12.9	0M10-100-0 2	0M20-055-02
4	8	NYLOC NUT TYPE P		M20	0M20-000-11
3	32	HEX HD BOLT		M12 x 45 LG	0M12-045-01
2	64	CSK.SOCKET HEAD SCREW		M12 x 40 LG	0M12-040-03
1	96	NYLOC NUT TYPE P	M12	M12	0M12-000-11

SURFACE FINISH
UNLESS STATED OTHERWISE

- ▽ ROUGH MACHINE N9
- ▽▽ FINE MACHINE N8
- ▽▽▽ GRIND N6

MACHINING TOLERANCES
UNLESS STATED OTHERWISE
X = +/- 0.5
X . X = +/- 0.25
X . XX = +/- 0.05
ANGLES +/- 0.5°
DIMENSIONS IN MILLIMETERS

Design by	Drawn by	Copied	Checked	Standard	Affirmed	Scale	Replace	Replaced by
MDB	MDB	–	–	A3	–	–	–	–

DAWSON CONSTRUCTION PLANT LTD.

HPH2400E

LEG INSERTS ASSEMBLY

Sheet 1 of 1

Date 08/09/2010

Drawing no. SA 2-000-00-02E

Rf.nr	Qnt.	Revision	Date	Intro.	Appr.by

3RD ANGLE

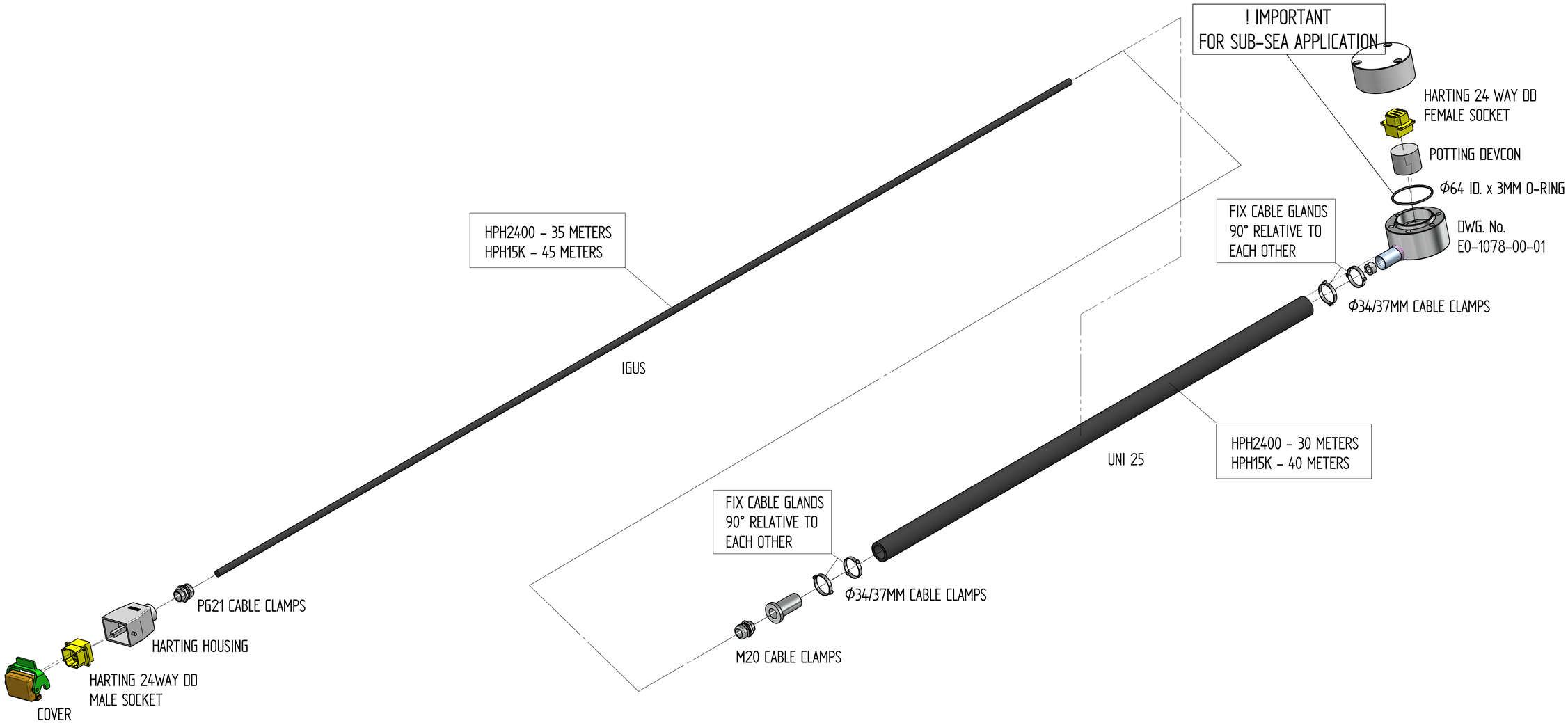

SURFACE FINISH	MACHINING TOLERANCES
UNLESS STATED OTHERWISE	UNLESS STATED OTHERWISE
▽ ROUGH MACHINE N9	X = +/- 0.5
▽▽ FINE MACHINE N8	X . X = +/- 0.25
▽▽▽ GRIND N6	X . XX = +/- 0.05
	ANGLES +/- 0.5°
	DIMENSIONS IN MILLIMETERS

Ref.no.	Qnt.	Part name	Material	Dimension	Remark

Design by	Drawn by	Copied	Checked	Standard	Affirmed	Scale	Replace	Replaced by
MDB	MDB	–	–	A2	–	–	–	–

DAWSON CONSTRUCTION PLANT LTD.

ELECTRIC CABLE HOSE

Sheet 2 of 2

Date 08/05/2013

Drawing no.

3RD ANGLE

Rf.nr	Qnt.	Revision	Date	Intro.	Appr.by

Item Number	Quan tity	Description	Part Number
5	6	GUIDE SLEEVE INSERT SHORT Ø914	6-300-76-01
4	1	SPREADER PLATE UNIVERSAL CAN	6-005-30-02
3	1	GUIDE SLEEVE	2-300-11-03
2	1	Front Leg Universal Can	2-061-00-01
1	1	Rear Leg Universal Guide	2-060-00-01

Approximate weight 8 Tonne

DUE TO THE CONFINED SPACED WITHIN THE UNIVERSAL SLEEVE, WHEN TIGHTENING THE BOLTS WE RECOMMEND USING A 5:1 TORQUE MULTIPLIER (SEE REFERENCE SHEETS) TO ACHIEVE THE CORRECT TORQUE.. BOLTS ARE USED IN CONJUNCTION WITH NORDLOCK WASHERS TO PREVENT VIBRATING LOOSE. INSPECT REGULARLY TO ENSURE BOLTS ARE SECURE.

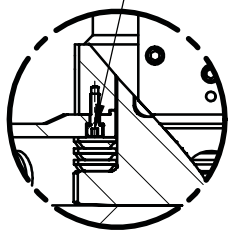

DETAIL A

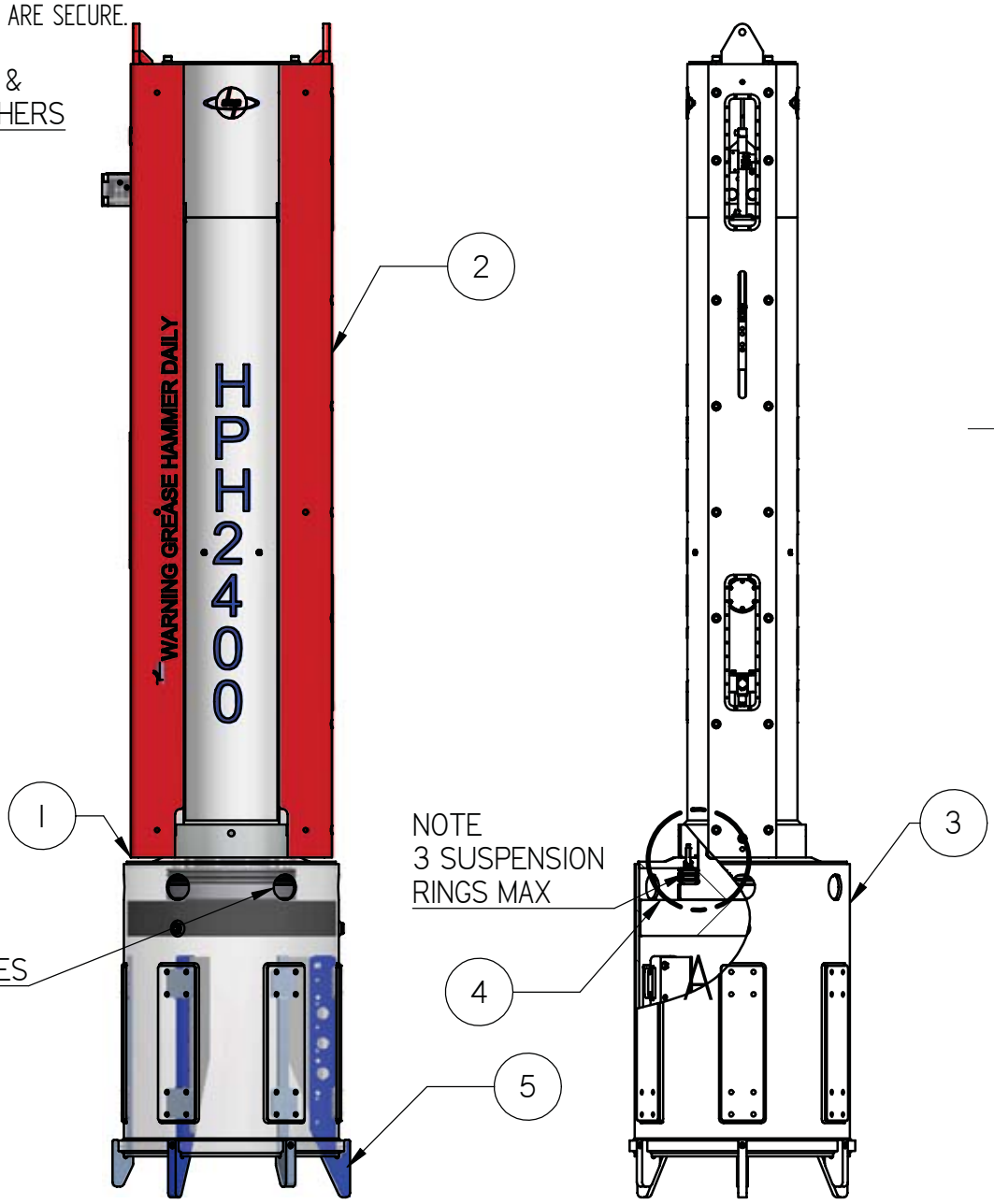

SURFACE FINISH	MACHINING TOLERANCES
UNLESS STATED OTHERWISE	UNLESS STATED OTHERWISE
▽ ROUGH MACHINE N9	X = +/- 0.5
▽▽ FINE MACHINE N8	X . X = +/- 0.25
▽▽▽ GRIND N6	X . XX = +/- 0.05
	ANGLES +/- 0.5°
	DIMENSIONS IN MILLIMETERS

Ref.no.	Qnt.	Part name	Material	Dimension	Remark

Design by	Drawn by	Copied	Checked	Standard	Affirmed	Scale	Replace	Replaced by
peter watts	peter watts	-	-	A4	-	-	-	-

DAWSON CONSTRUCTION PLANT LTD.

Hammer 2400 MKII

GA With Ø914 Universal Drive Sleeve

Sheet 1 of 1

Date 12/02/2008

Drawing no. 2-300-00-01

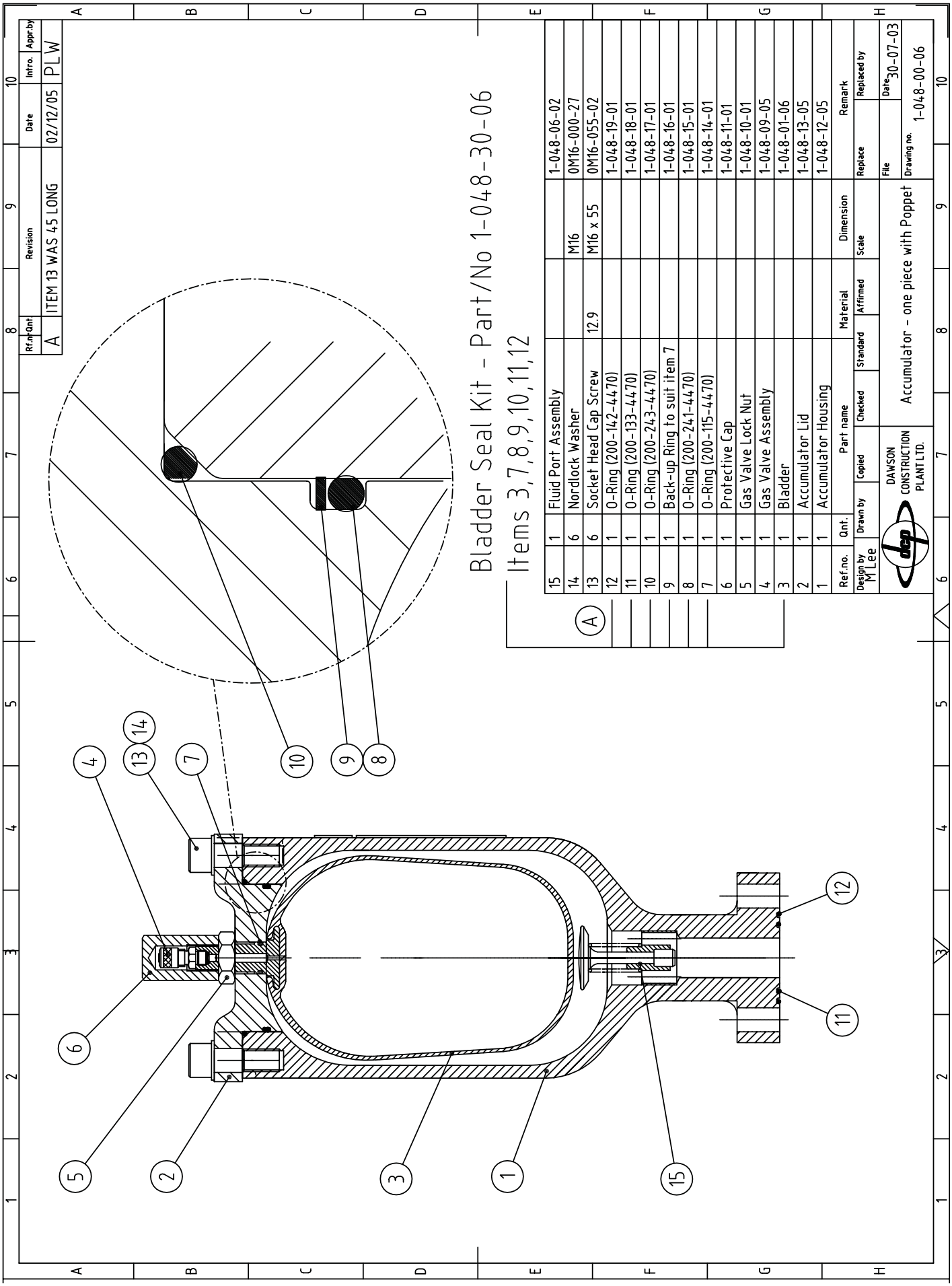
Bladder Seal Kit - Part/No 1-048-30-06
Items 3,7,8,9,10,11,12
A
15 1 Fluid Port Assembly 1-048-06-02
14 6 Nordlock Washer M16 0M16-000-27
13 6 Socket Head Cap Screw 12.9 M16 x 55 0M16-055-02
12 1 O-Ring (200-142-4470) 1-048-19-01
11 1 O-Ring (200-133-4470) 1-048-18-01
10 1 O-Ring (200-243-4470) 1-048-17-01
9 1 Back-up Ring to suit item 7 1-048-16-01
8 1 O-Ring (200-241-4470) 1-048-15-01
7 1 O-Ring (200-115-4470) 1-048-14-01
6 1 Protective Cap 1-048-11-01
5 1 Gas Valve Lock Nut 1-048-10-01
4 1 Gas Valve Assembly 1-048-09-05
3 1 Bladder 1-048-01-06
2 1 Accumulator Lid 1-048-13-05
1 1 Accumulator Housing 1-048-12-05
Ref.no. Qnt. Part name Material Dimension Remark
Design by M Lee
Drawn by
Copied
Checked
Standard
Affirmed
Scale
Replace
Replaced by
DAWSON CONSTRUCTION PLANT LTD.
Accumulator - one piece with Poppet
File
Date 30-07-03
Drawing no. 1-048-00-06
Rf.nr Qnt Revision Date Intro. Appr.by
A ITEM 13 WAS 45 LONG 02/12/05 PLW

APPENDIX

7.2 Accumulator Parts List and Instructions

Important Safety Notes for Bladder Accumulators

1. Use nitrogen gas only
2. All accumulators are supplied precharged to 100bar (1450 psi) unless sent via air-freight – in which case they will be shipped unprecharged.
3. Always use the gas filling apparatus supplied by Dawson. This equipment includes a regulator valve specifically designed for use with hammer accumulators where the precharge pressure is less than the supply cylinder pressure.
4. Read the instructions below fully before attempting to adjust the precharge in any accumulator
5. Routine maintenance on the accumulator in-situ or removal of the accumulator must only be carried out when the hydraulic system pressure has been completely removed.

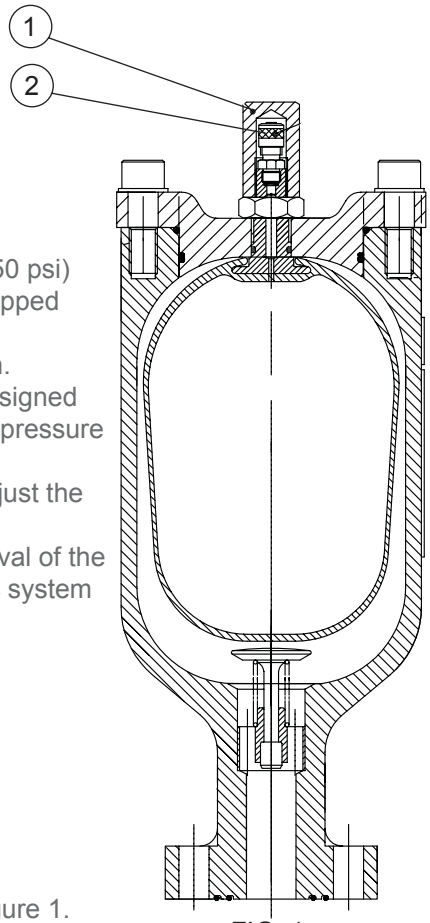

FIG. 1

Accumulator Pre-charge Pressure

High pressure accumulator – 100 bar
Low Pressure Accumulator – 3 bar

Pre-charge Pressure

1. Remove Protective Cap (1) and Sealing cap (2) – see figure 1.
2. Attach the Regulator Valve to the nitrogen cylinder – see figure 2.
3. Attach the charging set (5) to the accumulator gas valve assembly (6) and connect charging hose (7) between the regulator and the charging set connection.
4. Back off handle (8) anticlockwise until loose. Check gas bleed valve (9) on charging set is closed and screw hand wheel (10) clockwise to open gas valve.
5. Open nitrogen cylinder valve by turning key (11), cylinder pressure will register on right hand gauge (12). This pressure should be checked against the required precharged pressure.
6. Turn handle (8) clockwise until outlet pressure on left hand gauge (13) registers 10% higher than required precharge pressure (110 bar or 3.5 bar). When pressure on the charging set and outlet gauges are equal, close nitrogen cylinder valve.
7. Turn hand wheel (10) anticlockwise to seal gas valve.
8. Crack bleed valve (9) to exhaust gas from charging hose and remove hose from charging set and replace hose connection sealing cap.
9. Close bleed valve, turn hand wheel (10) clockwise to open gas valve and crack bleed valve (9) to vent down to required precharge pressure. Close bleed valve.
10. Turn hand wheel (10) anticlockwise to reseal gas valve, crack bleed valve and remove charging set from the accumulator.
11. Test accumulator gas valve for leaks using soapy water or similar.
12. Replace sealing cap (2) and tighten with pliers. Replace protective cap using a wrench.

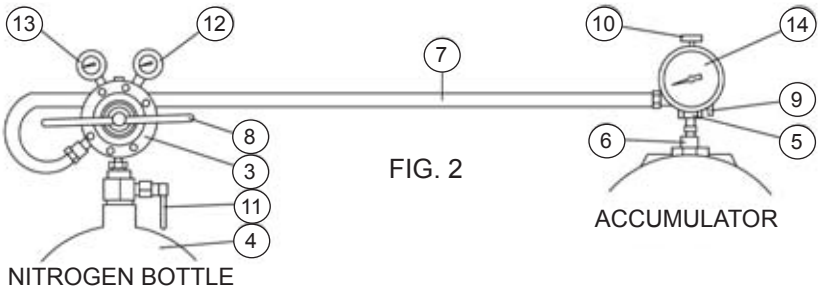

FIG. 2

Inspection and repair of Accumulators

Due to the nature of the design and specific assembly procedures it is recommended that the accumulators should only be inspected and repaired by a competent person. Dawson Construction Plant Limited or their approved dealers will be happy to undertake this work as required. Please note the Important Safety Notes at the beginning of this section.

Removel of Accumulators Pre-charge

- Remove Protective Cap (Item 6) from the Bladder Stem by unscrewing anti-clockwise
- Remove the Sealing Cap from the Gas Valve Assembly (Item 4)
- Connect Charging Set to the Gas Valve Assembly
- Release all the gas pressure by opening the Bleed Valve (Item 9 on the gas Charging Set)
- Disconnect the Charging Set from the Accumulator

Removal of Accumulators Lid & Bladder

- Remove M16 Socket Head Cap Screw (Item 13) and washers (Item 14)
- Remove Lid & Bladder (Item 2) from Accumulator Housing (Item 1)

Cleaning and Inspection

- Clean all metallic components with an organic solvent – do not use on rubber components
- Inspect the Bladder (Item 3) for any visible signs of damage. (Cracking or Surface Abrasion etc.)
- Inspect the Housing (Item 1) and Lid (Item 2) both inside and outside for signs of corrosion / mechanical damage.
- Replace any parts found or considered to be defective.
- Replace the following parts irrespective of condition:

1) O-Rings – items 7, 8,10, 11 and 12
2) Back-up Ring – item 9

- If the unit was removed from the system the connecting O-Rings (items 11 and 12) should be replaced irrespective of condition

Replacement pf Bladder - having removed the Accumulator Lid

- Unscrew the Gas Valve Assembly (Item 4) from the Bladder Stem by turning anti-clockwise.
- Remove the Locknut (Item 5) from the Bladder Stem by turning the Locknut anti-clockwise, remove the bladder from the Accumulator Lid.

Fitting of Bladder to Lid

- Ensure ‘O’-Ring (Item 8) is fitted to new the Bladder’s stem. Push the stem through the central hole in the Lid (Item 2) then fit Locknut (Item 5)

Fitting of Bladder & Lid to Accumulator Body

- Checking that all O-Rings & Back-up Rings are in Place. Expel all nitrogen from the Bladder (Item 2) to enable it to pass through the top opening in the Housing (Item 1).
- Insert the assembled Bladder & Lid into the Accumulator Housing aligning the holes in the Lid with the M16 tapped holes in the Housing.
- Ensure the M16 Socket Head Cap Screws (Items 13) are in good clean condition then install them together with the M16 Nordlock washers (Items 14) into the top of the Housing
- Tighten Items 13 to a torque of 231Nm (173 lbs.ft)
- Re-fit the Gas Valve Assembly (Item 4) and tighten
- Re-fit the Protective Cap (Item 6) and tighten.

Re-Assembly is now complete and the accumulator is ready to be Pre-charged – see details at the top of this section.

PRIOR TO APPLYING HYDRAULIC PRESSURE TO THE SYSTEM THE ACCUMULATOR MUST BE PRECHARGED WITH NITROGEN IN ACCORDANCE WITH THE ABOVE INSTRUCTIONS. FAILURE TO DO SO WILL RESULT IN BLADDER FAILURE.

HYDRAULIC HOSE DETAILS FOR HPH2400

HOSES

Item 1	Qty	Description	Part No.
1	1	1/4” EP hose with 8S 90° to 8S 45° 620mm C to C AOR 90°	
2	1	1/4” EP hose with 8S 90° to 8S 45° 620mm C to C AOR 270°	
3	1	1/4” EP	2.110.08.02
4	1	4SH-24 Hose	2.111.01.01
5	1	4SH-16 Hose	2.111.02.01

Fittings:

A	3	3/8” BSP to 8S stud coupling + WD	1.110.02.02
B	3	1/4” BSP to 8S stud coupling + WD	1.111.12.01
C	7	1/4” BSP WD plug	1.018.18.01
D	2	1” BSP SAE flange 6000 series	1.111.20.01
E	4	1 1/2” BSP SAE flange 6000series	1.088.00.01
F	1	Flanged elbow	1.111.17.01

APPENDIX 7.4

HPH 2400 Power Pack - Parts List

Please refer to Power pack manual for full details

7.4.1 - Hydraulic Circuit

7.4.2 - Electrical Circuit

7.4.3 - Engine Type

Rf.no	Qnt.	Revision	Date	Intro.	Appr.by

3RD ANGLE

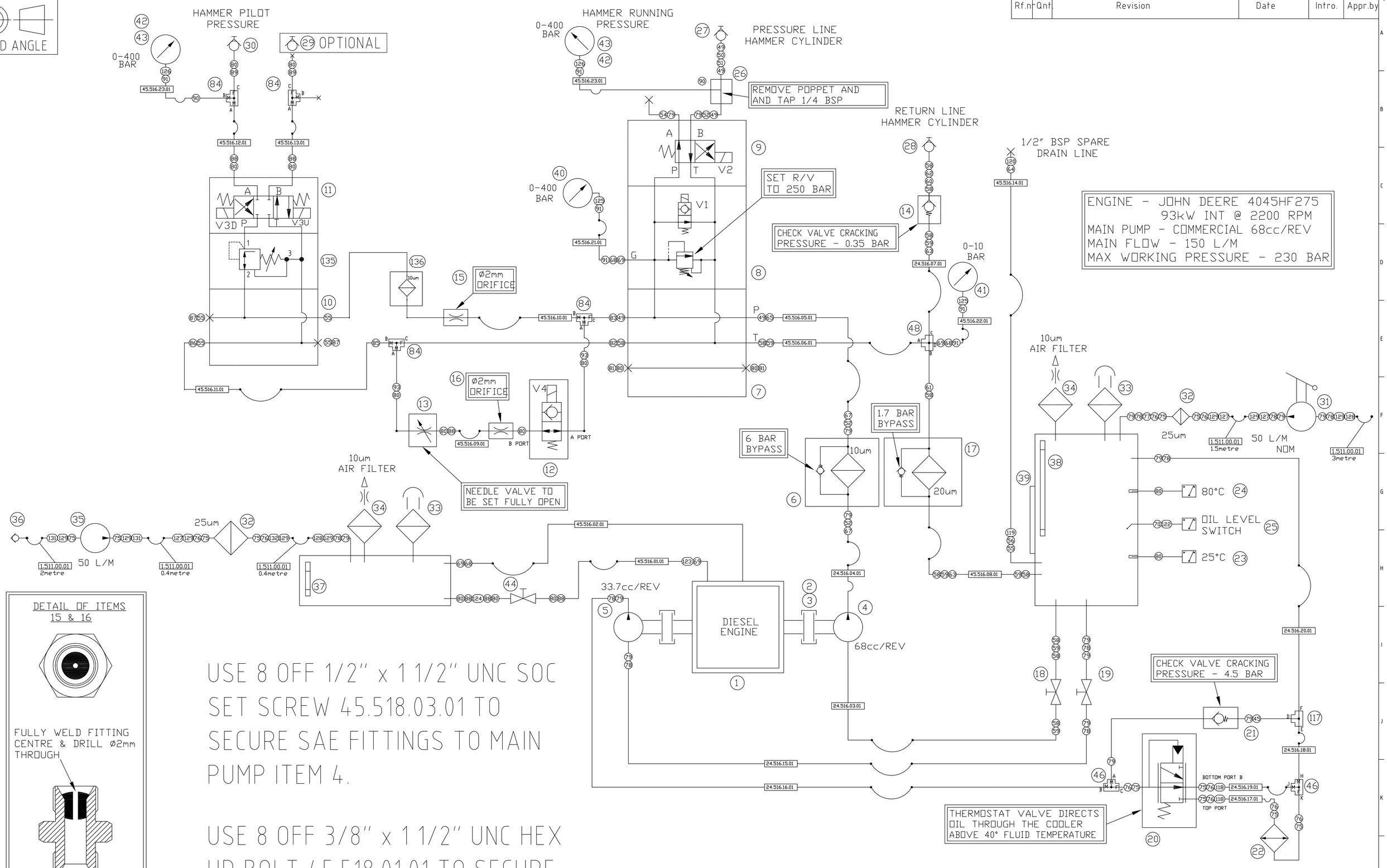

USE 8 OFF 1/2" x 1 1/2" UNC SOC SET SCREW 45.518.03.01 TO SECURE SAE FITTINGS TO MAIN PUMP ITEM 4.

USE 8 OFF 3/8" x 1 1/2" UNC HEX HD BOLT 45.518.01.01 TO SECURE COUPLING ITEM 2 TO ENGINE.

SURFACE FINISH UNLESS STATED OTHERWISE	MACHINING TOLERANCES UNLESS STATED OTHERWISE
▽ ROUGH MACHINE N9	X = +/- 0.5
▽▽ FINE MACHINE N8	X . X = +/- 0.25
▽▽▽ GRIND N6	X . XX = +/- 0.05
	ANGLES +/- 0.5°
	DIMENSIONS IN MILLIMETERS

Ref.no.	Qnt.	Part name	Material	Dimension	Remark

Design by	Drawn by	Copied	Checked	Standard	Affirmed	Scale	Replace	Replaced by
PLW	PLW			2 OF 2				

DAWSON CONSTRUCTION PLANT LTD.

2400 ELECTRIC HAMMER POWER PACK
HYDRAULIC CIRCUIT

File | Date 01/07/13

Drawing no. 24-516-00-03

3RD ANGLE

Rf.no	Qnt.	Revision	Date	Intro.	Appr.by

* PARTS ARE REFERENCE ONLY THEY APPEAR ON OTHER ASSEMBLIES.

	No.	PART.	DESCRIPTION	QTY
*	1	DIESEL ENGINE 94Kw	JOHN DEERE 4045HF475 24.511.06.01	1
*	2	COUPLING	H00231	1
*	3	BELL HOUSING		1
*	4	COMMERCIAL PUMP	P350A.497AEJ.AB17.7 2.593.00.01	1
*	5	FIXED DISPLACEMENT COOLING PUMP	3ANS50 AS H00233	1
	6	PRESSURE FILTER	24P.2.10C.M.1 H00188	1
	7	MANIFOLD BLOCK	MR7.1.G.1" H00210	1
	8	RELIEF UNLOADER	YRFI-LCN-B-T H00212	1
	9	CONTROL VALVE	DPHI.2631.2.N.24V DC H00208	1
	10	MANIFOLD BLOCK	MR3.1.G H00211	1
	11	CONTROL VALVE	DHI.0711.2.N.24V DC H00170	1
	12	WARM UP CARTRIDGE	OD-15-06-56 H00176	1
	12	WARM UP VALVE BODY	OC-10-09-004 H00177	1
	12	WARM UP VALVE COIL	OD-02-03-01-30-OC H00178	1
	13	FLOW CONTROL	NVO6B H00163	1
	14	RETURN LINE CHECK VALVE	CV12A-05 H00209	1
	15	ADAPTOR RESTRICTOR	1/2"-3/8" BSP M/M (MOD) H00111 (MOD)	1
	16	ADAPTOR RESTRICTOR	3/8" BSP M/M (MOD) H00152 (MOD)	1
	17	RETURN FILTER	40CN220QBM3GG241 H00179.2	1
	18	MAIN SUCTION CHECK VALVE	BV 24 B H00172	1
	19	COOLER SUCTION CHECK VALVE	BV 16 B H00228	1
	20	COOLER LINE THERMOSTAT	E7053-45 H00232	1
	21	COOLER LINE CHECK VALVE	CV8A-65 (DCP3509) H00254	1
	22	ENG MOUNT HYD COOLER	SUPPLIED WITH JOHN DEERE ENGINE	1
	23	25°C TEMP SWITCH	TS.IRNO.025.3/8 BSP 1.547.11.01	1
	24	ADJUSTABLE THERMOSTAT	RS-561-460 SMM1 H00183	1
	25	FLOAT SWITCH	MFS 21E2 H00185	1
	26	"P" LINE CHECK VALVE	CV 10A-05 H00200	1
	27	QR COUPLING	1 1/4" A SERIES MALE 1.516.00.01	1
	28	QR COUPLING	1 1/2" FIRG MALE 1.518.00.01	1

No.	PART.	DESCRIPTION	QTY
29	QR COUPLING	3/8" FIRG FEMALE 1.512.00.01	1
30	~~QR COUPLING~~	~~3/8" FIRG MALE 1.513.00.01~~	1
31	ROTARY OIL HAND PUMP	VL 0102 H00193	1
32	IN LINE FILTER	SP16B BDNO H00173	2
33	TANK FILLER W/STRAINER	TRBF-3 45.518.38.01	2
34	TANK BREATHER	SA075-G2-L10-A H00192	2
35	DIESEL PUMP	VR 050-2120 H00180	1
36	FOOTER VALVE	23759-0000B H00181	1
37	FUEL LEVEL GAUGE	G/LL15-2485GW 45.518.40.01	1
38	SIGHT LEVEL GAUGE	LVA 30 H00191	1
39	ACCESS COVER	ø200mm COVER PLATE 45.518.11.01	2
39	ACCESS COVER O-RING	BS 433 45.518.07.01	2
40	PRESSURE LINE GAUGE	1001 - 400 H00182	1
41	RETURN LINE LINE GAUGE	100P/150/G + U CLAMP H00194	1
42	Pressure Gauge 0-400 Bar 63mm	63B/6T/G H00195	2
43	Clamp to suit 63mm Gauge	TBA H00196	2
44	DIESEL LINE BALL VALVE	BV 06 B H00205	1
45	Male/Female Adaptor 1" BSP	TBA H00229	1
46	1" BSP F/M/M TEE	TBA H00255	2
47			
48	MODIFIED M/M/M TEE 1.5" BSP	H00138 45.513.42.01	1
49	Dowty Seal 1.25" BSP	TBA 1.102.03.01	5
50	Male Bulkhead 1.25" BSP	BH09508 H00117	1
51	Male / Female Straight 1.25" BSP	AOM120F120 H00122	1
52	Male/Male Adaptor 1.25" - 1"	AOM116M120 H00120	3
54	1" Blanking Plug	AM0116 H00101	1
55	DOWETY SEAL 1/2"	TBA H00020	6
56	Male/Male Adaptor 1/2" BSP	AOM108M108 H00110	1
57			

No.	PART.	DESCRIPTION	QTY
58	Dowty Seal 1.5" BSP	TBA H00134	11
59	Male/Male Adaptor 1.5" BSP	MB24 H00135	6
60	Male/Female Block 90 1.5" BSP	TBA H00143	1
61	M/F Swivel Adaptor 1.5" BSP	TBA H00213	1
62	Male Bulkhead Fitting 1.5" BSP	TBA H00136	1
63	Male/Female Swept 90 1.5" BSP	E/S/MB24/FB24 H00139	2
64	Bulkhead c/w Locknut 1/2" BSP	ABHM108M108L H00112	1
65	Male / Male Adaptor 1.25" BSP	AOM120M120 H00118	1
67	Male/Female Swept 90 1.25" BSP	TBA H00123	2
68	Male/Male Adaptor 1/4" BSP	TBA H00128	3
69	Dowty SEAL 1/4" BSP	TBA H00127	4
70	Dowty SEAL 2" BSP	TBA H00031	1
71			
72			
73			
74			
75	Dowty SEAL 3/4" BSP	TBA H00148	11
76	Male / Male Adaptor 1" - 3/4" BSP	AOM112M116 H00105	9
77	Female/Female Block 90 1" BSP	TBA H00214	1
78	Male/Male Adaptor 1" BSP	AM0116M116 H00102	9
79	Dowty SEAL 1" BSP	TBA H00100	16
80	Dowty SEAL 3/8" BSP	TBA H00150	14
81	Blanking Plug 3/8" BSP	TBA H00151	1
82	Male Adaptor 1.5" - 3/8" BSP	TBA H00137	1
83	Male Adaptor 1.25" - 3/8" BSP	TBA H00119	1
84	3/8" BSP F/M/M TEE	TBA H00155	4
85	Male/Female Block 90 3/8" BSP	TBA H00157	1
86	Male Adaptor 1/2" - 3/8" BSP	TBA H00111	1
87	Blanking Plug 1/2" BSP	TBA H00109	3

No.	PART.	DESCRIPTION	QTY
88	Male/Male Adaptor 3/8" BSP	320-0606 H00152	6
89	Male Bulkhead 3/8" BSP	TBA H00153	2
90	Female/Male Block 90 3/8" - 1/4" BSP	TBA H00158	2
91	Male/Female Block 90 1/4" BSP	TBA H00157	6
93	Male/Female Straight 3/8" BSP	TBA H00156	2
94	FUEL IN - TANK TO PRE-FILTER 3/8" NOM BORE R1AT - 655mm 3/8" FEMALE STRAIGHT 3/8" FEMALE SWEPT 90	45.516.01.01	1
95	FUEL OUT - ENGINE TO TANK RL-6 2000mm long E/C fitted with U04BF06	45.516.02.01	1
96	MAIN SUCTION - TANK TO MAIN PUMP 1 1/2" NOM BORE R2AT - 800mm 1 1/2" FEMALE STRAIGHT 1 1/2" 3000 PSI SAE SWEPT 90	24.516.03.01	1
97	MAIN PRESSURE LINE - MAIN PUMP TO PRESSURE FILTER 1 1/4" NOM BORE 4SH - 455mm 1 1/4" FEMALE STRAIGHT 1 1/4" 3000 PSI SAE SWEPT 90	24.516.04.01	1
98	MAIN PRESSURE LINE - PRESSURE FILTER TO MICRO 1 1/4" NOM BORE 4SH - 1300mm 1 1/4" FEMALE STRAIGHT 1 1/4" FEMALE SWEPT 90	45.516.05.01	1
99	MAIN TANK LINE- MICRO TO TEE 1 1/2" NOM BORE R1AT - 700mm 1 1/2" FEMALE STRAIGHT 1 1/2" FEMALE SWEPT 90	45.516.06.01	1
100	MAIN TANK LINE- TEE PIECE TO BULKHEAD 1 1/2" NOM BORE R2AT - 380mm 1 1/2" FEMALE STRAIGHT 1 1/2" FEMALE SWEPT 90	24.516.07.01	1
101	MAIN TANK LINE- TEE PIECE TO TANK 1 1/2" NOM BORE R2AT - 495mm 1 1/2" FEMALE STRAIGHT 1 1/2" FEMALE SWEPT 90	45.516.08.01	1
102	CETOP 3 LINE- NEEDLE VALVE TO WARM UP VALVE 3/8" NOM BORE R2AT - 325mm 3/8" FEMALE SWEPT 90 3/8" FEMALE SWEPT 90	45.516.09.01	1
103	CETOP 3 LINE- CETOP 7 "P" TO CETOP 3 "P" 3/8" NOM BORE R2AT - 390mm 3/8" FEMALE SWEPT 90 3/8" FEMALE SWEPT 90	45.516.10.01	1
104	CETOP 3 LINE- CETOP 7 "T" TO CETOP 3 "T" 3/8" NOM BORE R2AT - 415mm 3/8" FEMALE SWEPT 90 3/8" FEMALE STRAIGHT	45.516.11.01	1
105	CETOP 3 LINE- CETOP 3 "A" TO BULKHEAD 3/8" NOM BORE R2AT - 470mm 3/8" FEMALE SWEPT 90 3/8" FEMALE STRAIGHT	45.516.12.01	1

No.	PART.	DESCRIPTION	QTY
106	CETOP 3 LINE- CETOP 3 "B" TO BULKHEAD 3/8" NOM BORE R2AT - 415mm 3/8" FEMALE SWEPT 90 3/8" FEMALE STRAIGHT	45.516.13.01	1
107	SPARE DRAIN LINE - BULKHEAD TO TANK 1/2" NOM BORE R1AT - 1050mm 1/2" FEMALE SWEPT 90 1/2" FEMALE STRAIGHT	45.516.14.01	1
108	COOLER LINE - TANK TO SUCTION PUMP 1" NOM BORE R1AT - 2030mm 1" FEMALE SWEPT 90 1" FEMALE STRAIGHT	24.516.15.01	1
109	COOLER LINE - PUMP TO THERMOSTAT VALVE 1" NOM BORE R1AT - 1415mm 1" FEMALE SWEPT 90 1" FEMALE SWEPT 90	24.516.16.01	1
110	COOLER LINE - THERMOSTAT VALVE "R" PORT TO RAD TOP 1" NOM BORE R1AT - 1550mm 1" FEMALE STRAIGHT 1" FEMALE SWEPT 90	24.516.17.01	1
111	COOLER LINE - CHECK VALVE BASE TEE TO RAD BASE TEE 1" NOM BORE R1AT - 440mm 1" FEMALE STRAIGHT 1" FEMALE SWEPT 90	24.516.18.01	1
112	COOLER LINE - RAD BASE TEE TO THERMOSTAT "B" PORT 1" NOM BORE R1AT - 315mm 1" FEMALE SWEPT 90 1" FEMALE SWEPT 90	24.516.19.01	1
113	COOLER LINE - CHECK VALVE TO TANK 1" NOM BORE R1AT - 1745mm 1" FEMALE STRAIGHT 1" FEMALE SWEPT 90	24.516.20.01	1
114	MINI MESSS HOSE - MAIN PRESSURE MINI MESS TEST HOSE - 2150mm 1/4" FEMALE STRAIGHT 1/4" FEMALE STRAIGHT	45.516.21.01	1
115	MINI MESSS HOSE - RETURN LINE PRESSURE MINI MESS TEST HOSE - 1120mm 1/4" FEMALE STRAIGHT 1/4" FEMALE STRAIGHT	45.516.22.01	1
116	MINI MESSS HOSE - CETOP 3A & B PRESSURE MINI MESS TEST HOSE - 1765mm 1/4" FEMALE STRAIGHT 1/4" FEMALE STRAIGHT	45.516.23.01	2
117	1" BSP M/M/M TEE	TBA H00257	1
118	Male/Female Block 90 1" BSP	TBA H00258	1
119	Male/Female Swept 90 1/2" BSP	TBA H00259	1
120	Female Blanking plug 1/2" BSP	TBA H00113	1
121	Blanking Plug 2" BSP	TBA H00144	1
122	Tank Level Switch Housing TBA	TBA 45-513-75-01	1
123	Male/Male Adaptor 3/8" BSP - 12mm	TBA H00160	1
124	Female/Female Swept 90 3/8" BSP	TBA H00159	1

No.	PART.	DESCRIPTION	QTY
125	Gauge Connector+Ring 1/4" BSP Male - 1/2"	TBA H00129	2
126	Gauge Connector+Ring 1/4" BSP Male - 1/4"	MB24 H00132	2
127	Female 90Deg Swept 1" BSP - 1" Hose	HSCP1616FG90B H00104	3
128	1" Hose Insert 3/4" BSP Male	TBA H00103	2
129	Jubilee Clip 25-35mm	TBA H00190	8
130	Fuel/Oil Transfer Hose 1" America Oil	TBA 1.511.00.01	1
131	3/4" BSP Male 1" Hose Insert	TBA H00149	2
132	1" BSP F/F Block Compact 90	ACF116F116 H00106	1
133	Pipe Clamp 35mm	TBA 45.518.08.01	2
134	Pipe Clamp 38mm	TBA TBA	2
135	Direct-acting, pressure reducing/relieving valve assembly. PRDB-LAN-X8B/M. BSP Ports. 35-210 Bar set at 50 Bar Standard. 40 L/Min.	H00361	1
136	MINI PRESSURE FILTER 10 MICRON HPH1619100	H00362	1

Ref.no.	Qnt.	Part name	Material	Dimension	Remark

Design by	Drawn by	Copied	Checked	Standard	Affirmed	Scale	Replace	Replaced by
PLW	PLW			1 OF 2				

DAWSON CONSTRUCTION PLANT LTD.

HPH 2400 POWER PACK
HYDRAULIC PARTS LIST

File | Date 01/07/13

Drawing no. 24-516-00-03

SURFACE FINISH
UNLESS STATED OTHERWISE
▽ ROUGH MACHINE N9
▽▽ FINE MACHINE N8
▽▽▽ GRIND N6

MACHINING TOLERANCES
UNLESS STATED OTHERWISE
X = +/- 0.5
X . X = +/- 0.25
X . XX = +/- 0.05
ANGLES +/- 0.5°
DIMENSIONS IN MILLIMETERS

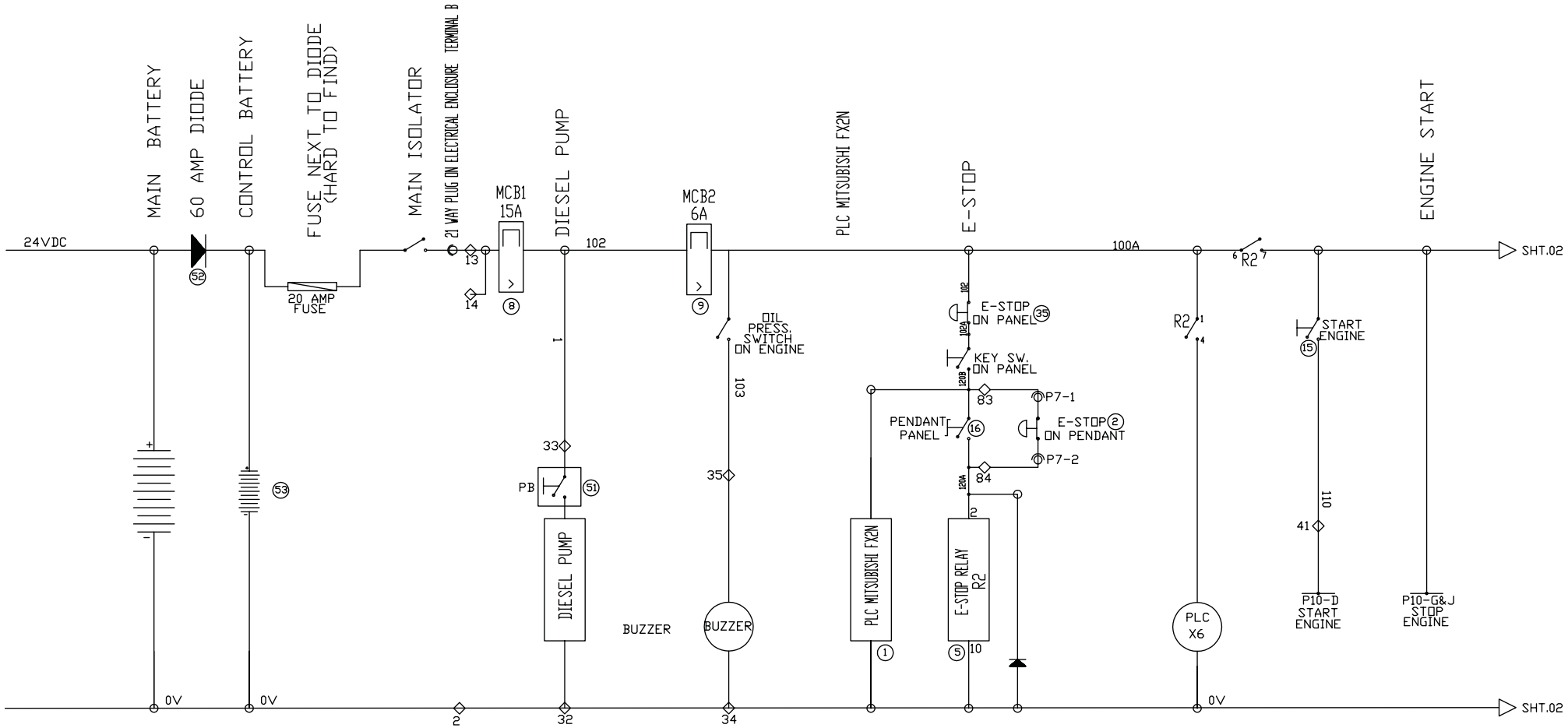

PLC

PLC INPUTS

No.	FUNCTION	GOES TO
X0	ENERGY RAISE	DIN 42-44
X1	ENERGY LOWER	DIN 46-48
X2	START	DIN 50-52
X3	WARMUP RUN	PANEL SW.
X4	AUTO	PANEL SW.
X5	OIL UP TO TEMP	VS1202 P3-1
X6	E-STOP	R2-PIN-4
X7	OIL LEVEL OK	DIN 23
X10	OIL OVER TEMP	VS1202 P3-2
X11	ENGINE FAST	PANEL SW.
X12	NOT USED	
X13	OFF PILE	VS1202 P3-3
X14	NOT USED	
X15	HAMMER DOWN SIGNAL	VS1202 P3-6

PLC OUTPUTS

No.	FUNCTION	GOES TO
Y0	UP VALVE	DIN 63
Y1	DOWN VALVE	DIN 65
Y2	VALVE 1 UNLOAD	DIN 73
Y3	ON PILE PANEL LED	DIN 67
Y4	VALVE 2 HAMMER	DIN 69
Y5	OIL COLD LED	L.E.D ON PANEL
Y6	WARM UP VALVE	DIN 71
Y7	SPEED SELECT	VS1202 P6-5
Y10	OIL OVER TEMP	L.E.D ON PANEL
Y11	OIL LEVEL LED	L.E.D ON PANEL
Y12		

PENDANT COMPONENTS

1	8 BUTTON PENDANT ENCLOSURE	1	BPX	XACA08
2	E-STOP BUTTON	1	BPX	ZABS844
3	16 WAY INSERT	1	RS COMPONENTS	448-890
4	16 WAY TOP ENTRY HOOD	1	RS COMPONENTS	243-6164
5	GREEN PANEL L.E.D	1	RS COMPONENTS	210-967
6	RED PANEL L.E.D	1	RS COMPONENTS	210-951
7	YELLOW PANEL L.E.D	1	RS COMPONENTS	210-989
8	BLANK LEGEND PLATES	1	BPX - TELEMEQ	ZB2BY2101
9	ENGRAVED LEGEND PLATES	1	TRACEWAY	
10	BLANKING PLUG	1	BPX - TELEMEQ	ZB2SZ3
11	GREEN PUSH BUTTON	1	BPX - TELEMEQ	XACA9413
12	BLACK PUSH BUTTON	2	BPX - TELEMEQ	XACA9412
13	SELECTOR SWITCH	3	BPX - TELEMEQ	ZA2BD2
14	GREEN PUSH BUTTON	1	BPX - TELEMEQ	XACA9413
15	N.OPEN CONTACT	6	BPX - TELEMEQ	ZB2BE101
16	N.CLOSED CONTACT	1	BPX - TELEMEQ	ZB2BE102
17	12 CORE CABLE 15 Mts	1	ICD	SY 1mm
18	CABLE ENTRY GLAND	1	RS COMPONENTS	157-2101

ELECTRICAL HAMMER CIRCUIT DIAGRAM SHT.01

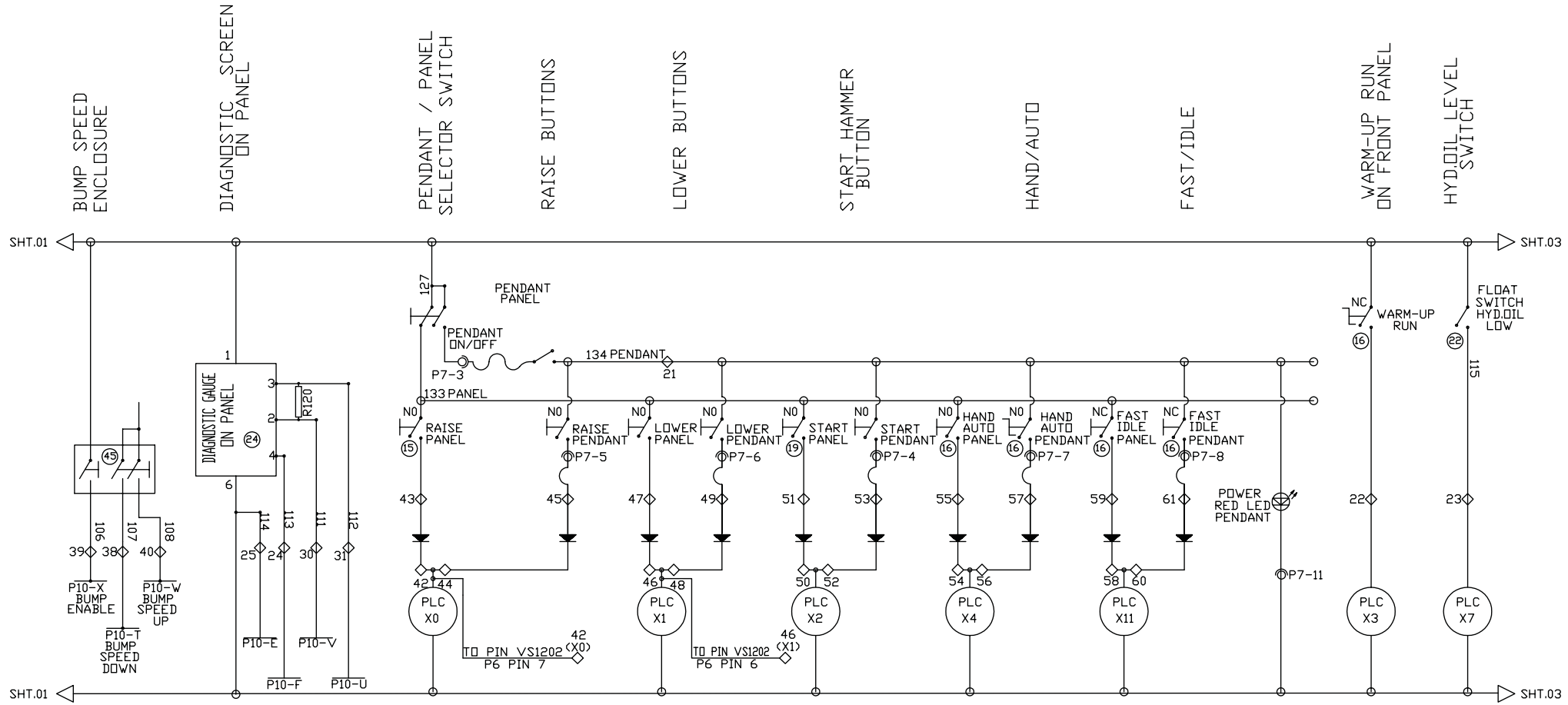

PENDANT CABLE
P7 16 WAY HARTING (PENDANT)

PIN No.	FUNCTION	WIRE No.	GOES TO
1	E-STOP	1	DIN 83
2	E-STOP	2	DIN 84
3	+24V	3	DIN 21
4	START HAMMER (TO X2)	4	DIN 53
5	RAISE (TO X0)	5	DIN 53
6	LOWER (TO X1)	6	DIN 45
7	HAND/AUTO (TO X4)	7	DIN 57
8	FAST/IDLE (TO X11)	8	DIN 61
9	GREEN LED	9	DIN 62
10	AMBER LED	10	DIN 67
11	0 VOLTS	11	DIN 68

HAMMER CABLE P8 & P9

P8 24 WAY HARTING DD POWER PACK END

PIN No.	FUNCTION	GOES TO
1	UP VALVE +	DIN 11
2	UP VALVE -	DIN 12
3	DOWN VALVE +	DIN 9
4	DOWN VALVE -	DIN 10
5	PROXIMITY SUPPLY	DIN 1
6	UPPER PROX 3 OUT I	DIN 5
7	UPPER PROX- 4 OUT L	DIN 6
8	PROXIMIY 0 VOLTS	DIN 2
9	PROXIMITY SUPPLY	DIN 1
10	PROXIMIY - 1 OUT (CHANNEL "A")	DIN 3
11	PROXIMITY - 2 OUT (CHANNEL "B")	DIN 4
12	PROXIMITY 0 VOLTS	DIN 11

IGUS CF10-05-12

P9 24 WAY HARTING DD HAMMER END

PIN No.	FUNCTION
1	
2	
3	
4	
5	UP VALVE +
6	UP VALVE -
7	DOWN VALVE +
8	DOWN VALVE -
9	PROXIMITY SUPPLY
10	PROXIMITY - 3 OUT (INDEX)
11	PROXIMITY- 4 OUT (OFF PILE)
12	PROXIMITY 0 VOLTS
13	PROXIMITY SUPPLY
14	PROXIMIY - 1 OUT (CHANNEL "A")
15	PROXIMITY - 2 OUT (CHANNEL "B")
16	PROXIMITY 0 VOLTS

ELECTRICAL HAMMER CIRCUIT DIAGRAM SHT.02

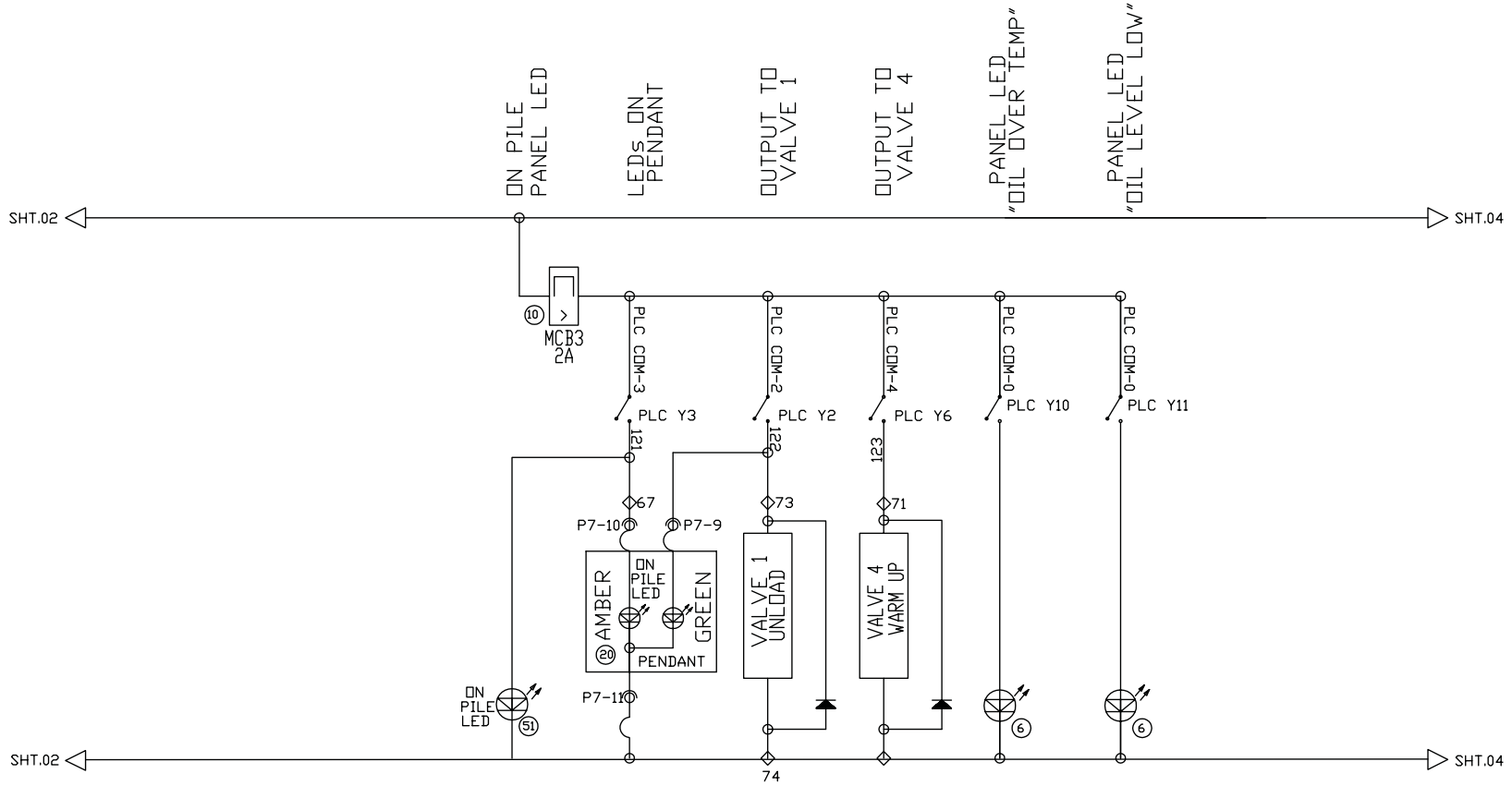

◇ DIN RAIL CONNECTIONS ◇

1	24v (100)
2	0 VOLTS
3	P6-1 (ENCODER "A")
4	P6-2 (ENCODER "B")
5	P6-3 (INDEX)
6	P6-4 (OFF PILE) (X13)
7	P5-1 (OIL TEMP. SENSOR +)
8	P5-2 (OIL TEMP. SENSOR -)
9	DOWN VALVE SUPPLY ,VIA DROPPER RES.
10	DOWN VALVE -
11	UP VALVE SUPPLY ,VIA DROPPER RES.
12	UP VALVE -
13	102 [24V (15A)]
14	102 [24V (15A)]
15	100 [24V (5A)]
16	100 [24V (5A)]
17	100 [24V (5A)]
18	100 [24V (5A)]
19	100 [24V (5A)]
20	100 [24V (5A)]
21	PENDANT SUPPLY 24V

HAMMER MODULE CONNECTIONS BLUE

24V FROM ISOLATOR VIA P10 PIN B
20 AMP FUSE IN ENGINE HARNESS

22	X3 WARM UP- RUN
23	X7 OIL LEVEL LOW
24	113 (TO PIN 4 DIA.GAUGE)
25	114 (TO PIN 6 DIA.GAUGE)
26	100 [24V (5A)]
27	100 [24V (5A)]
28	100 [24V (5A)]
29	100 [24V (5A)]
30	111 (TO PIN 2 DIA.GAUGE)
31	112 (TO PIN 3 DIA.GAUGE)
32	0 V
33	DIESEL PUMP 16 AMP SUPPLY
34	0 V
35	
36	104 TO P4-1
37	105 TO P4-2
38	107 BUMP SPEED DOWN (P6-T)
39	106 BUMP SPEED ENABLE (P6-X)
40	108 BUMP SPEED UP (P6-W)
41	110 START ENGINE (P6-D)

42	X0 PLC INPUT (TO PLC)
43	X0 PLC INPUT FROM PANEL
44	X0 PLC INPUT (TO PLC)
45	X0 PLC INPUT FROM PENDANT
46	X1 PLC INPUT (TO PLC)
47	X1 PLC INPUT FROM PANEL
48	X1 PLC INPUT (TO PLC)
49	X1 PLC INPUT FROM PENDANT
50	X2 PLC INPUT (TO PLC)
51	X2 PLC INPUT FROM PANEL
52	X2 PLC INPUT (TO PLC)
53	X2 PLC INPUT FROM PENDANT
54	X4 PLC INPUT (TO PLC)
55	X4 PLC INPUT FROM PANEL
56	X4 PLC INPUT (TO PLC)
57	X4PLC INPUT FROM PENDANT
58	X11 PLC INPUT (TO PLC)
59	X11 PLC INPUT FROM PANEL
60	X11 PLC INPUT (TO PLC)
61	X11 PLC INPUT FROM PENDANT

62	PENDANT GREEN LED
63	Y0 PLC OUTPUT, UP VALVE
64	122
65	Y1 PLC OUTPUT, DOWN VALVE
66	0 V
67	Y3 PLC OUTPUT, OFF PILE LED
68	0 V
69	Y4 PLC OUTPUT, HAMMER VALVE
70	0 V
71	Y6 PLC OUTPUT, WARM- UP VALVE
72	0 V
73	Y2 PLC OUTPUT , UNLOAD VALVE
74	0 V
75	
76	0 V
77	
78	0 V
79	
80	0 V
81	
82	120A (FROM PENDANT-PANEL SELECT)
83	TO E-STOP PB ON PANEL
84	TO E-STOP RELAY (R2) PIN 3

CLAMP DIODES MOUNTED IN THE DIN RAIL

P11 PROXIMITY MODULE PLUG

PIN No.	FUNCTION	GOES TO
A	24v	P9-9
B	CHANNEL A	P9-14
C	CHANNEL B	P9-15
D	0v	P9-16
E	LIMIT	P9-11
F	INDEX	P9-10
G		
H		
J		
K		

ELECTRICAL HAMMER CIRCUIT DIAGRAM SHT.03

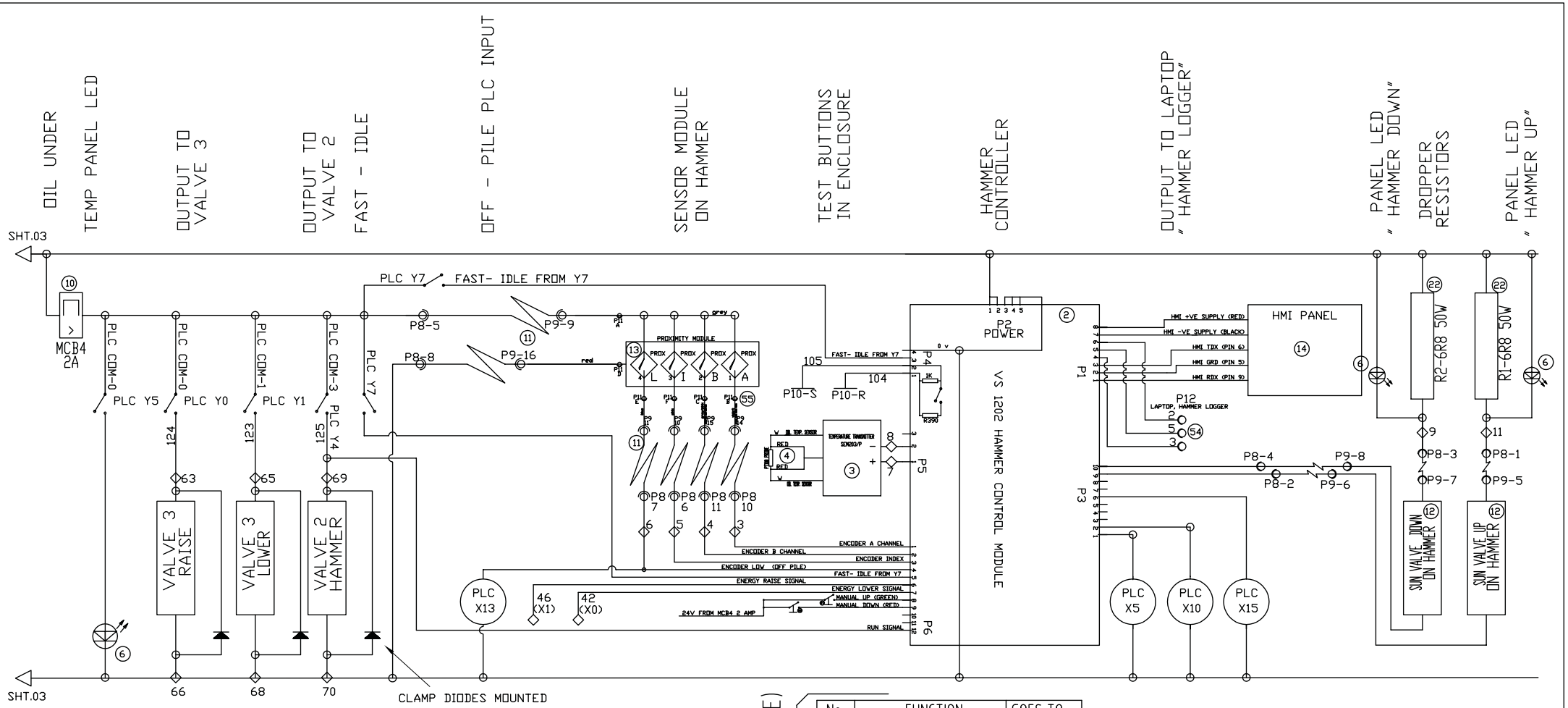

P12 OUTPUT TO LAPTOP (ON FRONT PANEL)

PIN No.	FUNCTION
1	
2	TXD2
3	RXD2
4	
5	SRC2
6	

COMPUTER COM PORT

PIN No.	FUNCTION
1	
2	RXD2
3	TXD2
4	
5	SRC2
6	
7	
8	
9	

P10 ENGINE MANAGEMENT 21 PIN ENGINE INTERFACE CONNECTOR (ON THE SIDE OF ELECTRICAL ENCLOSURE)

No.	FUNCTION	GOES TO
A	GLOW PLUG WAIT LAMP	NOT USED
B	24V FROM ENGINE HARNESS (FUSED AT 20 AMP)	DIN 13-14
C	SENSOR RETURN	NOT USED
D	110 START ENGINE	DIN 41- P6-D
E	114 PANEL GAUGE PIN 6	DIN 25 P6-E
F	113 PANEL GAUGE PIN 4	DIN 24 P6-F
G	100 STOP ENGINE	P6-J
H	WARNING LAMP DRIVER	NOT USED
J	100 STOP ENGINE	P6-G
K	TACHO OUTPUT	NOT USED
L	PRIMARY ANALOG THROTTLE	NOT USED
M	5v SENSOR POWER	NOT USED
N	SHUTDOWN OVERRIDE	NOT USED
P	SHUTDOWN OVERRIDE RETURN	NOT USED
R	104 SPEED RELAY	DIN 36- VS1202 -P4-1
S	105 SPEED RELAY	DIN 37- VS1202 -P4-2
T	107 BUMP SPEED DOWN	DIN 38 - P6-T
U	112 PANEL GAUGE PIN 3	DIN 31 - P6-U
V	111 PANEL GAUGE PIN 2	DIN 30 - P6-V
W	108 BUMP SPEED UP	DIN 40 - P6-V
X	106 BUMP ENABLE	DIN 39 - P6-X

NOTE
SPEED SELECT RELAY IS LOCATED IN THE VS1202 HAMMER CONTROL MODULE P4 PINS 1&2

ELECTRICAL HAMMER CIRCUIT DIAGRAM SHT.04

Rf.no	Qnt	Revision	Date	Intro.	Appr.by

3RD ANGLE

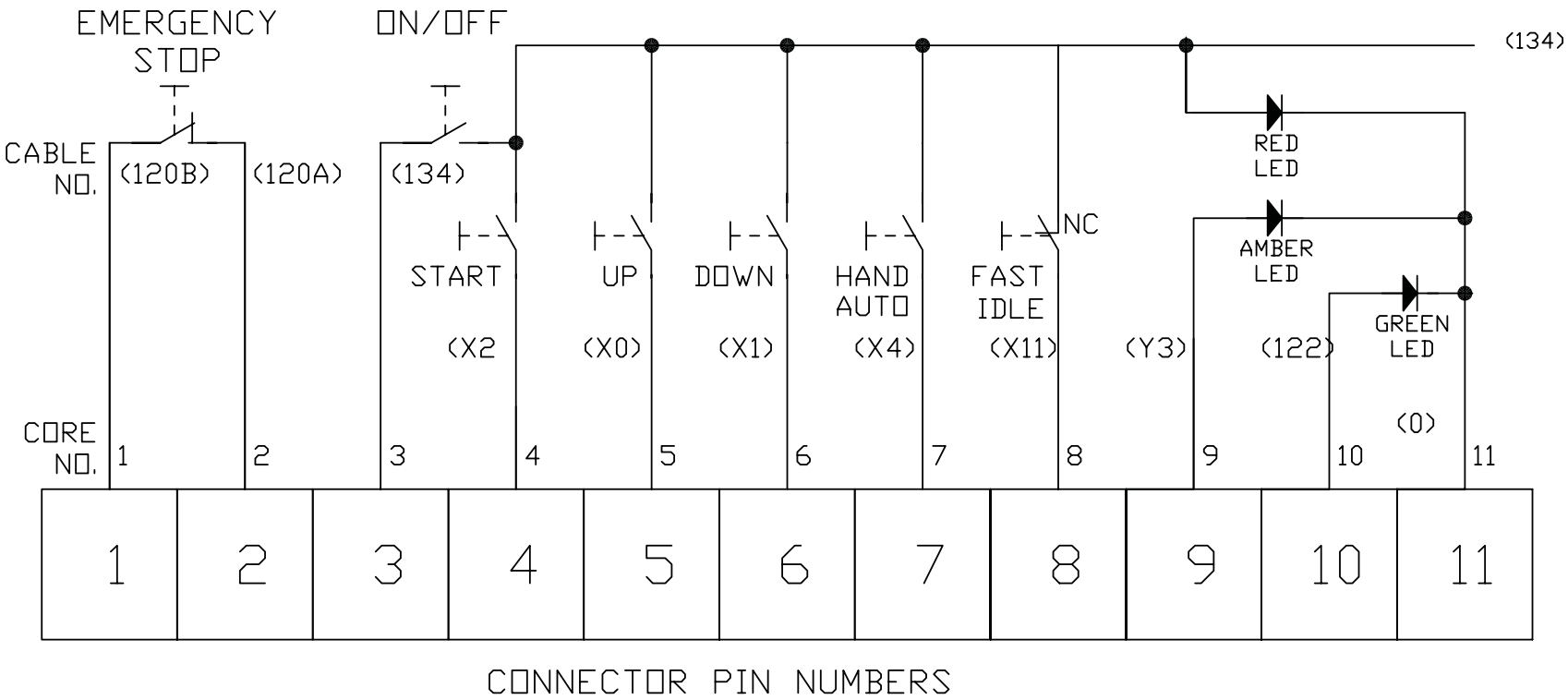

SURFACE FINISH UNLESS STATED OTHERWISE	MACHINING TOLERANCES UNLESS STATED OTHERWISE
▽ ROUGH MACHINE N9	X = +/- 0.5
▽▽ FINE MACHINE N8	X . X = +/- 0.25
▽▽▽ GRIND N6	X . XX = +/- 0.05
	ANGLES +/- 0.5°
	DIMENSIONS IN MILLIMETERS

Ref.no.	Qnt.	Part name	Material	Dimension	Remark
Design by	Drawn by	Copied	Checked	Standard	Affirmed	Scale	Replace	Replaced by
DAWSON CONSTRUCTION PLANT LTD.	PENDANT CIRCUIT	File	Date 6/11/11
		Drawing no.	

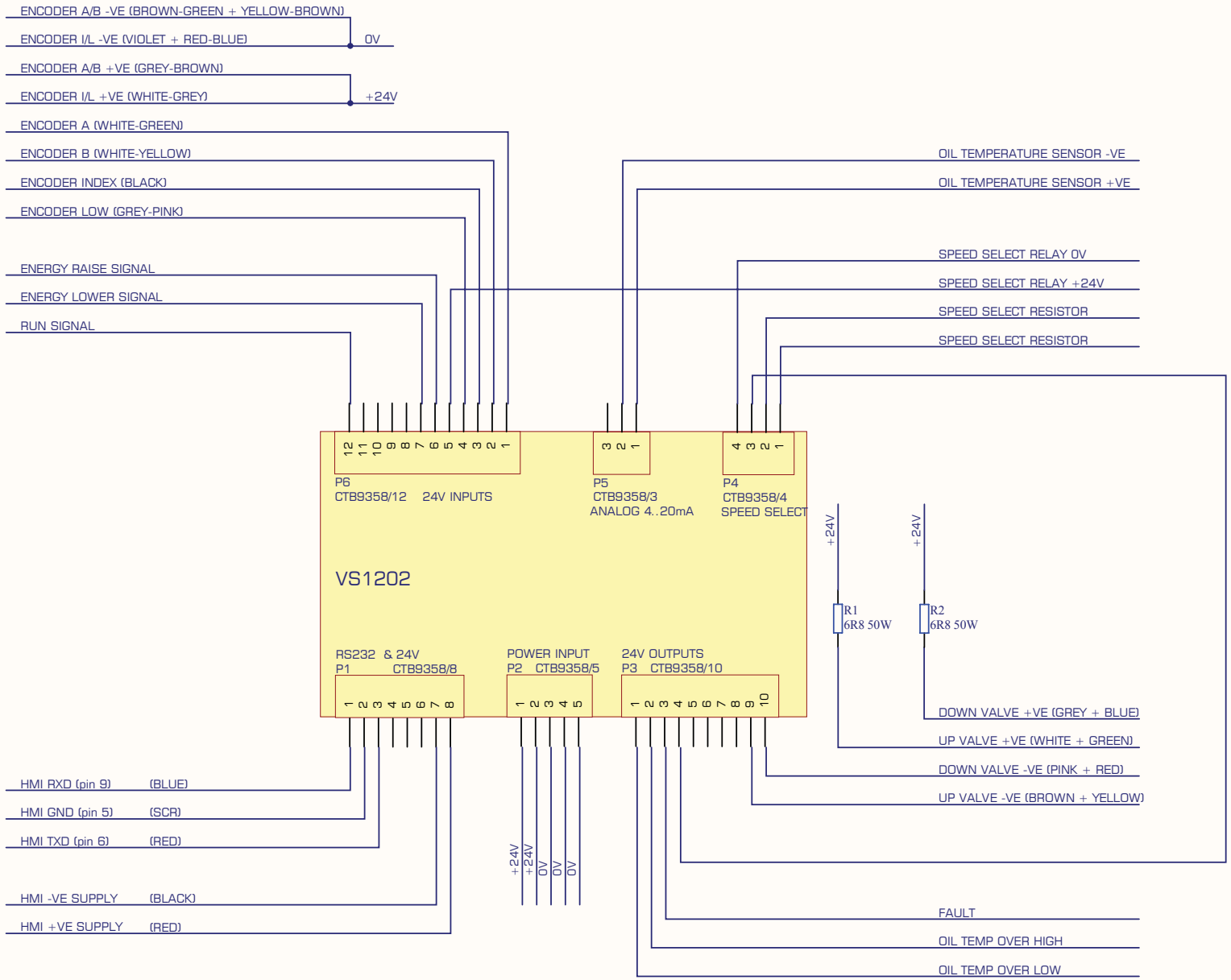

Printed: 15:32:03 01/08/2009

Title: DCP1202 Connections		
Size: A4	Number: VS1202	Revision: DRAFT D
File: Main.SchDoc		Date:
		Sheet 1 of 1

DAWSON

POWERTECH™ Medallion

A medallion is located on the rocker arm cover which identifies each engine as a John Deere POWERTECH™ engine.

NOTE: Four-valve head engines also have "16V" or "24V" printed on their medallions. The 4045HF475 has "16V" to denote 16 valves total while 6068HF475 has "24V" to denote 24 valves total.

RG11608 –UN–17OCT01

RG11609 –UN–17OCT01

POWERTECH is a trademark of Deere & Company.

OURGP11,0000274 –19–24NOV03–1/1

Engine Serial Number Plate

Each engine has a 13-digit John Deere engine serial number. The first two digits identify the factory that produced the engine:

- "CD" = Saran, France
- "PE" = Torreon, Mexico
- "T0" = Dubuque, Iowa
- "J0" = Rosario, Argentina

The engine's serial number plate (A) is located on the right-hand side of cylinder block behind the fuel filter.

A—Serial Number Plate

RG8007 –UN–15JAN99

13-Digit Engine Serial Number Plate

RG,RG34710,5506 –19–10NOV01–1/1

Record Engine Serial Number

Record all of the numbers and letters found on your engine serial number plate in the spaces provided below.

This information is very important for repair parts or warranty information.

Engine Serial Number (B)

_____

Engine Model Number (C)

_____

Coefficient of Absorption Value (D)
(Saran Engines Only)

_____

Saran Engine Serial Number Plate

Torreon Engine Serial Number Plate

RG,RG34710,5507 –19–10NOV01–1/1

POWERTECH™ 4.5 L Engines With Electronic Fuel Systems (Tier 2 Emission Certified) (Two-Valve Cylinder Head Models)

RG11931 —UN—06NOV01

4045 Engine (Stanadyne DE10 Injection Pump Shown)

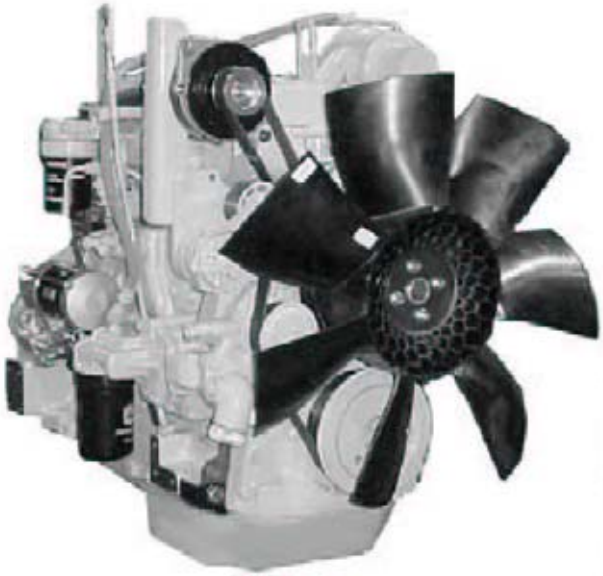

RG11932 —UN—06NOV01

4045 Engine

POWERTECH is a trademark of Deere & Company

OUOD002,0000162 —19—26FEB03—1/1

Record Fuel Injection Pump Model Number

Record the fuel injection pump model and serial information found on the serial number plate (A).

Model No. _____ RPM _____

Manufacturer's No. _____

Serial No. _____

A—Serial Number Plate

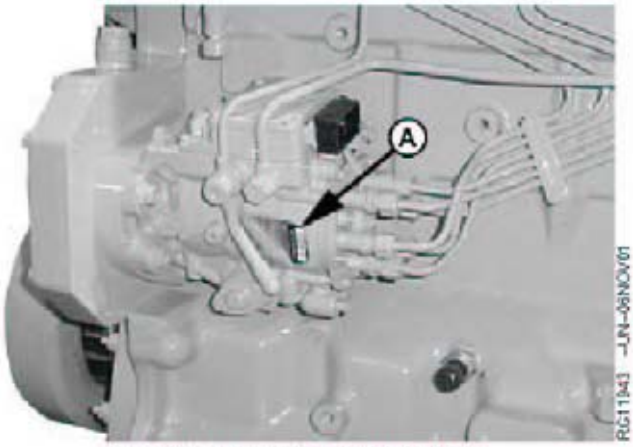

RG11943 —UN—06NOV01

Record Injection Pump Serial Number

RG,RG34710,5611 —19—10NOV01—1/1

TIGHTENING TORQUES FOR SCREWS WITH STANDARD METRIC THREAD

DAWSON CONSTRUCTION PLANT LTD

Screw size	Preload values F_M based on Grades in N			Tightening torques M_A based on Grades in Nm			Wrench size for			
							Hex head screw		Socket head screw	
	8.8	10.9	12.9	8.8	10.9	12.9	mm	Inch	mm	Inch
M4 x 0.7	3,900	5,700	6,700	3.1	4.5	5.3	7	9/32	3	-
M5 x 0.8	6,400	9,300	10,900	6.1	8.9	10.4	8	-	4	5/32
M6 x 1	9,000	13,200	15,400	10.4	15.5	18.0	10	-	5	-
M7 x 1	13,100	19,300	22,600	17.0	25.0	30.0	11	-	-	-
M8 x 1.25	16,500	24,200	28,500	25	37	43	13	1/2	6	-
M10 x 1.5	26,000	38,500	45,000	51	75	87	17	11/16	8	-
M12 x 1.75	38,500	56,000	66,000	87	130	150	19	3/4	10	-
M14 x 2	53,000	77,000	90,000	140	205	240	22	7/8	12	-
M16 x 2	72,000	106,000	124,000	215	310	370	24	61/64	14	9/16
M18 x 2.5	91,000	129,000	151,000	300	430	510	27	1-1/16	14	9/16
M20 x 2.5	117,000	166,000	194,000	430	620	720	30	1-3/16	17	43/64
M22 x 2.5	146,000	208,000	243,000	580	970	830	32	1-9/92	17	43/64
M24 x 3	168,000	239,000	280,000	740	1,060	1,240	36	1-7/16	19	3/4
M27 x 3	221,000	315,000	370,000	1,100	1,550	1,850	41	1-5/8	19	3/4
M30 x 3.5	270,000	385,000	450,000	1,500	2,100	2,500	46	1-13/16	22	7/8
M33 x 3.5	335,000	480,000	560,000	2,000	2,800	3,400	50	2	24	61/64
M36 x 4	395,000	560,000	660,000	2,600	3,700	4,300	55	2-3/16	27	1-1/16
M39 x 4	475,000	670,000	790,000	3,400	4,800	5,600	60	2-3/8	27	1-1/16

NOTE!
Preload forces and tightening torques are based on lightly lubricated screws and nuts (corresponds to medium friction $\mu G = 0.14$). Nm = x 0.7375 = ft. lbs.

APPENDIX 7.5 -

HYDRAULIC HAMMER TOOL KIT

(PART NO. 2.150.00.01)

PART NO.	QTY.	DESCRIPTION
065	1 off	3mm Allen Key
066	1 off	4mm Allen Key
067	1 off	5mm Allen Key
068	1 off	6mm Allen Key
2.150.01.01	1 off	8mm Allen Key
2.150.02.01	1 off	12mm Allen Key
2.150.03.01	1 off	14mm Allen Key
070	1 off	17mm Allen Key
1.150.02.01	1 off	19mm Allen Key - long series
1.150.03.01	1 off	22mm Allen Key
2.150.04.01	1 off	10mm Combination Spanner
1.150.12.01	1 off	19mm Combination Spanner
1.150.27.01	1 off	22mm Combination Spanner
1.150.28.01	1 off	24mm Combination Spanner
1.150.29.01	1 off	27mm Combination Spanner
1.150.09.01	1 off	18” Adjustable Spanner
1.150.21.01	1 off	External/Internal Circlip Pliers
1.150.20.01	1 off	5/16” Parallel Pin Punch
1.150.24.01	1 off	Soft Hammer
1.150.18.01	2 off	M24 Lifting Eye
1.150.16.01	1 off	¾” Sliding T Bar
1.150.23.01	1 off	¾” 200m Extension
2.150.06.01	1 off	65mm Socket 1” Square Drive
2.150.07.01	1 off	¾” Fem to 1” Male Convertor
2.150.05.01	1 off	2¼” A/F Open End Spanner
1.150.25.01	1 off	Grease Gun
1.070.00.01	1 off	Gas Filling Apparatus

DAWSON
CONSTRUCTION PLANT LTD

HPH1200

Blow Rate b.p.m.	Impact Energy kg.m	Bearing Capacity at Final Set (blows/25mm) - tonnes									
		2	4	6	8	10	12	14	16	18	20
120	640	17	29	38	45	50	55	59	62	65	67
115	710	19	32	42	50	56	61	65	69	72	75
110	780	20	35	46	55	61	67	72	76	79	82
105	850	22	38	50	59	67	73	78	82	86	89
100	930	24	42	55	65	73	80	85	90	94	98
95	1000	26	45	59	70	79	86	92	97	101	105
90	1070	28	48	63	75	84	92	98	104	108	112
85	1140	30	51	67	80	90	98	105	110	115	120
80	1210	32	54	71	85	95	104	111	117	122	127

HPH1800

Blow Rate b.p.m.	Impact Energy kg.m	Bearing Capacity at Final Set (blows/25mm) - tonnes									
		2	4	6	8	10	12	14	16	18	20
120	1005	26	45	59	70	79	86	92	97	102	106
115	1119	29	50	66	78	88	96	103	108	113	117
110	1233	32	55	73	86	97	106	113	119	125	129
105	1347	35	61	80	94	106	116	124	131	136	141
100	1458	38	66	86	102	115	125	134	141	148	153
95	1567	41	71	93	110	123	135	144	152	159	165
90	1680	44	76	99	118	132	144	154	163	170	176
85	1797	47	81	106	126	141	154	165	174	182	189
80	1910	51	87	114	135	152	165	177	186	194	202

HPH4500

Blow Rate b.p.m.	Impact Energy kg.m	Bearing Capacity at Final Set (blows/25mm) - tonnes									
		2	4	6	8	10	12	14	16	18	20
120	1838	48	83	109	129	145	158	169	178	186	193
115	2173	57	98	128	152	171	187	200	211	220	228
110	2509	66	113	148	176	198	216	230	243	254	263
105	2854	75	128	169	200	225	245	262	277	289	300
100	3192	84	144	189	223	251	274	293	309	323	335
95	3533	93	159	209	247	278	303	325	342	358	371
90	3874	102	174	229	271	305	333	356	375	392	407
85	4213	111	190	249	295	332	362	387	408	427	442
80	4549	119	205	269	318	358	391	418	441	461	478

HPH6500

Blow Rate b.p.m.	Impact Energy kg.m	Bearing Capacity at Final Set (blows/25mm) - tonnes									
		2	4	6	8	10	12	14	16	18	20
120	2500	65	113	148	175	197	215	230	243	254	264
116	2900	76	131	172	204	229	250	267	282	295	305
112	3300	87	149	195	232	261	285	305	321	335	347
108	3700	97	167	219	260	293	319	341	360	375	390
104	4100	108	185	243	288	324	354	378	399	416	432
100	4500	118	204	266	316	355	388	415	437	457	475
96	4900	129	221	291	345	387	423	452	476	498	516
92	5300	139	239	314	372	418	455	487	515	537	557
88	5700	150	257	337	399	449	490	525	553	578	599
84	6,100	160	275	361	427	481	525	561	592	618	642
80	6,500	171	293	385	455	513	559	598	631	659	684

HPH9000

Blow Rate b.p.m.	Impact Energy kNm	Bearing Capacity at Final Set (blows/25mm) - tonnes									
		2	4	6	8	10	12	14	16	18	20
90	38	101	173	227	269	302	330	352	372	388	403
86	45	118	202	265	314	354	386	413	435	455	472
82	51	135	232	304	361	406	443	473	499	522	541
78	58	153	262	343	407	458	499	534	563	588	610
74	64	170	291	381	452	509	555	593	626	654	678
70	71	187	320	420	498	560	611	654	689	720	747
66	77	204	350	459	544	612	668	714	753	787	816
62	84	221	379	498	590	664	724	774	817	853	885
58	90	238	409	536	636	715	780	834	880	920	954

HPH15000

Blow Rate b.p.m.	Impact Energy kNm	Bearing Capacity at Final Set (blows/25mm) - tonnes									
		2	4	6	8	10	12	14	16	18	20
120	61	162	278	365	433	487	531	568	599	626	649
115	72	192	329	432	512	577	629	673	710	741	769
110	83	222	381	500	592	666	727	778	820	857	889
105	94	252	432	566	671	755	824	881	929	971	1007
100	105	282	483	634	752	846	922	986	1041	1087	1127
95	117	312	535	702	833	937	1022	1093	1153	1204	1249
90	128	343	587	771	914	1028	1121	1199	1265	1322	1371
85	139	373	639	839	995	1119	1221	1305	1377	1438	1492
80	151	403	691	907	1075	1209	1319	1410	1488	1554	1612

EXCAVATOR MOUNTED OR CRANE SUSPENDED VIBRATORS

Dawson excavator mounted vibrators have been designed specifically to work in place of an excavator bucket to drive and extract piles. The pile can be lifted to vertical using the built-in lifting chain where it is then gripped tightly in a powerful hydraulic jaw. Once secured, the pile is then vibrated with high frequency vibrations so as to 'fluidise' the soil resisting the pile. Down-crowd force applied by the excavator boom, coupled with the self-weight of the pile and the vibrator, provides sufficient force to push the pile into the ground.

Naturally, the process works in reverse for pile extraction. The equipment offers a highly productive and cost effective piling rig based around a standard, readily available excavator!

Principal Advantages

- Compact, robust and reliable - no electrics!
- Simple and fast attachment to excavator
- Minimal height to maximise pile length
- Slim design to drive single sheet piles
- High power to weight ratio
- Universal joint suspension for easy alignment of piles
- Extremely low vibration transmitted to the excavator
- Enviromentally friendly - low noise/localised directional vibration
- Automatic hydraulic clamp operation
- Flexiblity in application
- Flow regulator prevents excessive oil supply to vibrator
- Heavy saddles available for crane suspended models

Driving / extracting when the movement is less than 1" (25mm) per minute is considered pratical refusal. Driving / extracting when movement is less than 1" (25mm) for more than 5 minutes of driving / extracting or driving at all when penetration is less than 1" (25mm) per minute and amplitude is greater than 1" (25mm) [vibrator and pile are bouncing] is considered improper use and will void the warranty. Contact DCP for an alternative larger vibrator.

TECHNICAL SPECIFICATIONS

SPECIFICATION	UNITS	Excavator Mounted Vibro Model				
		EMV70	EMV220	EMV300A	EMV450	EMV550
STATIC MOMENT	in lbs	60	263	400	606	674
	kgm	0.7	2.3	4.6	6.8	8.23
FREQUENCY	rpm	3,000	3,000	2,400	2,460	2,500
CENTRIFUGAL FORCE	lbs	15,730	50,236	67,420	100,000	125,592
	kN	70	220	300	453	564
AMPLITUDE - PEAK TO PEAK	in	0.157	0.45	0.58	0.54	0.54
	mm	4	12	14.7	13.7	13.7
MINIMUM REQUIRED FLOW RATE	gpm	8	24	35	52	68
	L/min	30	90	130	195	256
MAXIMUM ALLOWABLE FLOW RATE	gpm	32	67	67	94	107
	L/min	120	250	250	350	400
MINIMUM HYDRAULIC PRESSURE	psi	3,480	4,060	4,060	3,915	4,060
	bar	240	280	280	270	280
MAXIMUM HYDRAULIC PRESSURE	psi	5,076	5,076	5,076	5,076	5,076
	bar	350	350	350	350	350
MINIMUM HYDRAULIC MOTOR POWER	hp	16	80	80	118	160
	kW	12	50	60	88	120
DYNAMIC MASS INCLUDING UNIVERSAL CLAMP	lbs	781	814	1,380	2,240	2,576
	kg	355	370	625	1,008	1,150
TOTAL MASS INCLUDING UNIVERSAL CLAMP	lbs	1,122	1,155	2,123	2,834	3,360
	kg	510	525	965	1,275	1,500
MAXIMUM PILE MASS	lbs	1,760	1,760	1,760	2,240	3,136
	kg	800	800	800	1,000	1,400
MAXIMUM PUSH/PULL LOADING	lbs	6,171	16,500	33,600	33,600	49,500
	kg	2,800	7,500	15,000	15,000	22,500
TYPICAL EXCAVATOR WEIGHT	Ton	5.5 to 17	7.5 to 24	13 to 39	27 to 50	33 to 60
	tonne	5 to 15	7 to 22	12 to35	25 to 45	30 to 55
CLAMP FORCE	tonne	30	26.5	36	54	66
DIMENSIONS mm (inch)	A	445 (17.5)	445 (17.5)	615 (24)	615 (24)	646 (25.4)
	B	40 (1.5)	40 (1.5)	25 (1)	32 (1.25)	50 (1.97)
	C	275 (10.8)	275 (10.8)	250 (10)	230 (9)	370 (14.5)
	D	431 (17)	431 (17)	582 (23)	640 (25)	708 (27.9)
	E	431 (17)	431 (17)	429 (17)	510 (20)	555 (21.8)
	F	850 (33.5)	850 (33.5)	927 (36.5)	945 (37)	11.37 (44.8)
	G	1120 (44)	1120 (44)	1200 (47.25)	1250 (49)	1477 (58.2)
	H	130 (5.1)	130 (5.1)	150 (6)	175 (6.9)	190 (7.5)

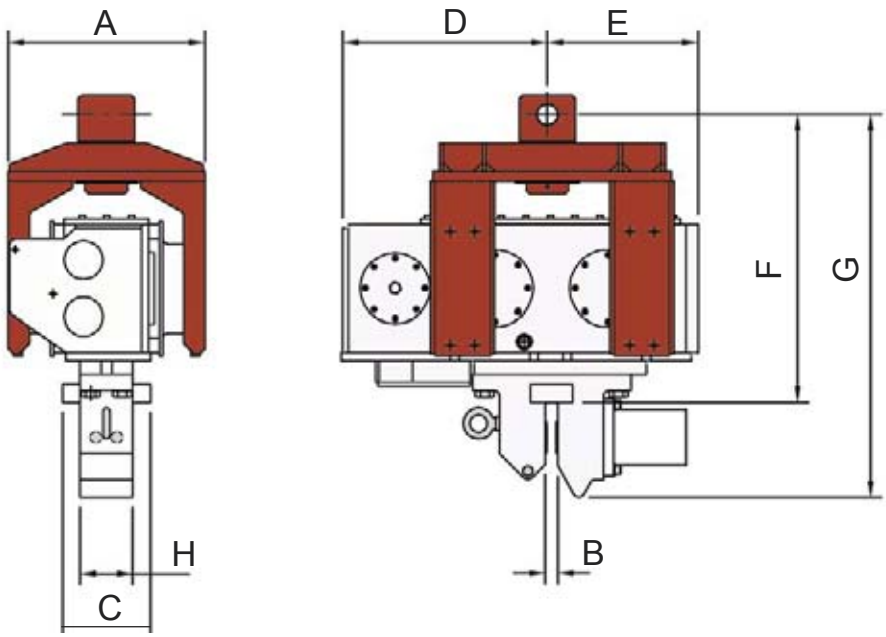

Clamps	Mass
300 Universal Clamp	163 kg
450 Universal Clamp	273 kg
550 Universal Clamp	416 kg
Caisson Beam with Clamps	670 kg

EMV300 Stand = 115kg

SPECIFICATION	UNITS	VIBRO MODEL				
		EMV70	EMV220	EMV300A	EMV450	EMV550
TRANSPORT WEIGHTS (approx)	kg	725	530	1165	1300	1500
DIMENSION ON A PALLLET (approx)	mm LxWxH	1.2x0.8x1.6	1.2x0.8x1.7	1.2x0.8x1.93	1.2x0.8x1.8	1.6x0.85x1.7

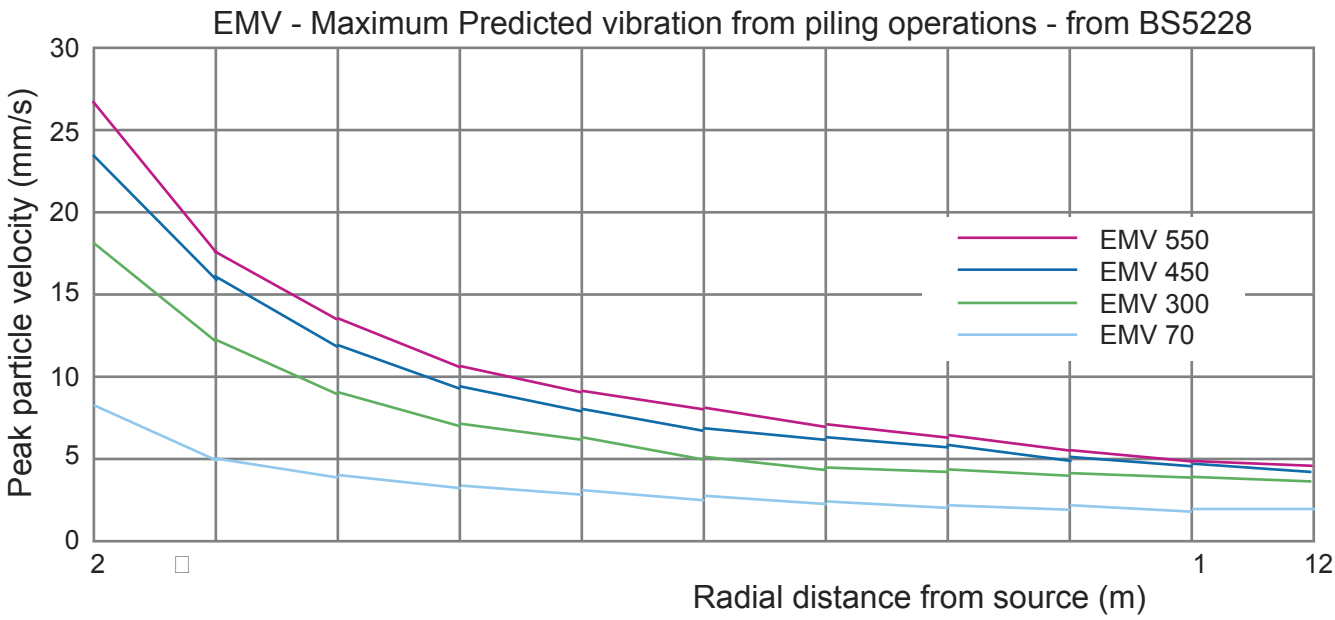

SELECTION GUIDE

There are many variables that determine how effectively a vibratory pile driver will perform. This graph below is a guide, not a guarantee! Vibratory drivers work at their best in granular (gravels and sands) materials, where the amplitude in the pile can “fluidise” the ground and allow the pile to advance as the ground rearranges itself. They will still function in cohesive materials (clays), but piles will not penetrate as far.

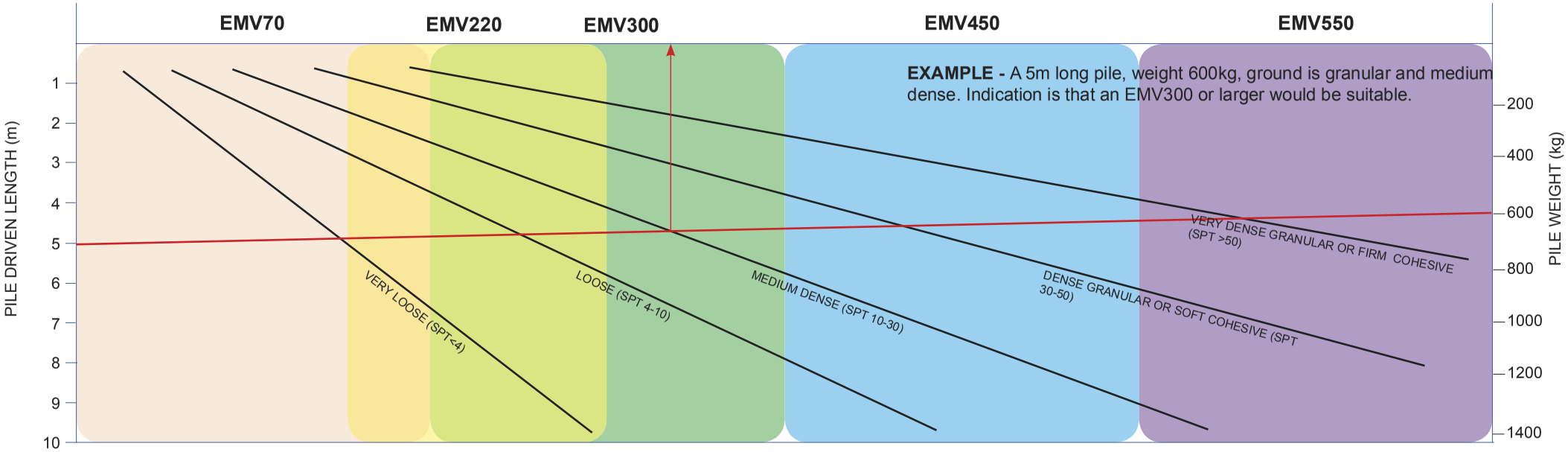

EXCAVATOR SIZING GUIDE

For completness, the flow and pressure from the excavator to the EMV should be checked against the specification sheets to confirm adequate hydraulic power. As a guide the EMVs typically suit the following base machine sizes:

EMV70 (requires 30 L/min, 240 bar)	**5.5 - 17 t excavator**
EMV220 (requires 90 L/min, 280 bar)	**7 - 22 t excavator**
EMV300 (requires 130 L/min, 280 bar)	**12 - 35t excavator**
EMV450 (requires 195 L/min, 270 bar)	**25 - 45t excavator**
EMV550 (requires 256 L/min, 280 bar)	**30 - 55t excavator**

EXCAVATOR MOUNTED EQUIPMENT

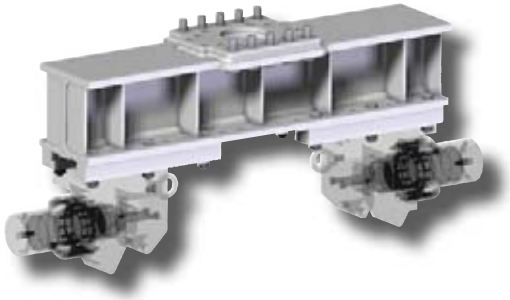

CAISSON BEAM

Caisson beam jaw assemblies can be positioned to suit any tube size between Ø300 I.D & Ø1100 mm O.D.

Part Number	Caisson Beam Assembly
4900	

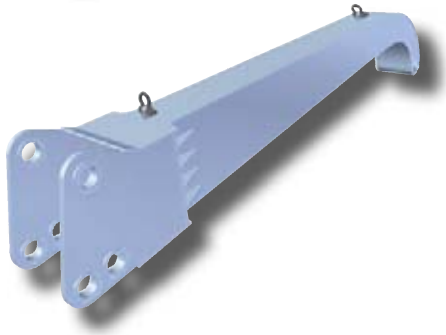

SWAN NECK

For extended reach and greater pile clearance on your excavator arm, enabling longer piles to be driven.

Part Number	Swan Neck
SN01-000-01	

ADAPTOR BRACKETS

Part Number	Dimensions - mm				Dipper Pin Part Number
	A	B	C	D	
4063	340	60	175	140	4089
4063A	495	80	200	190	4089A
4063C	458	89.5	225	190	4089C
4063D	410	60	200	190	4089D
4063E	458	60	225	190	4089E
4063F	495	63.75	200	190	4089F
4063M	458	63.75	225	190	4089M
4063R	495	69.85	225	190	4089R

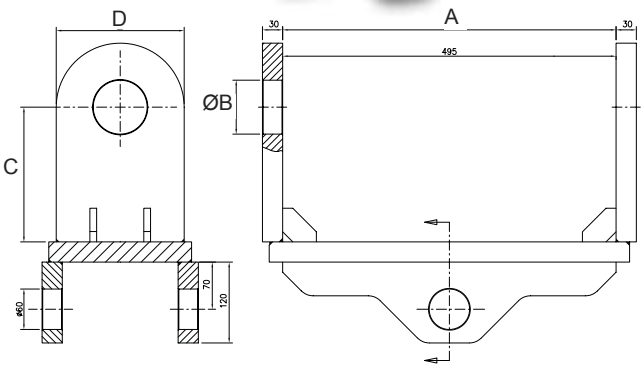

QUICK HITCH ADAPTOR

When an excavator has a guide hitch fitted and a double acting breaker to supply the EMV, the Dawson quick hitch adaptor bracket supplies fast, easy connection to the end equipment while maintaining the same degree of movement.

Part Number	Quick Hitch Adaptor
4586	

NEW ADDITIONAL SAFETY LATCH

CHAIN CLAMP

For all lifting applications. The unit indexes along the links of the chain and locks into place giving a quick and simple chain lock for lifting.

Features

- SWL of 2000 kg for the 8 mm chain clamp
  3200 kg for the 10 mm chain clamp
  8000 kg for the 16 mm chain clamp
- Robust high strength steel body
- Designed to withstand vibration - no screws or bolts!
- Minimal parts for durability
- Proof loading to twice the safe working load
- Quick coupling and release from load

Part Number	Chain Type	Safe Working Load
4130	16 mm	8 tonnes
TLR 360	10 mm	3.2 tonnes
4082	8 mm	2 tonnes

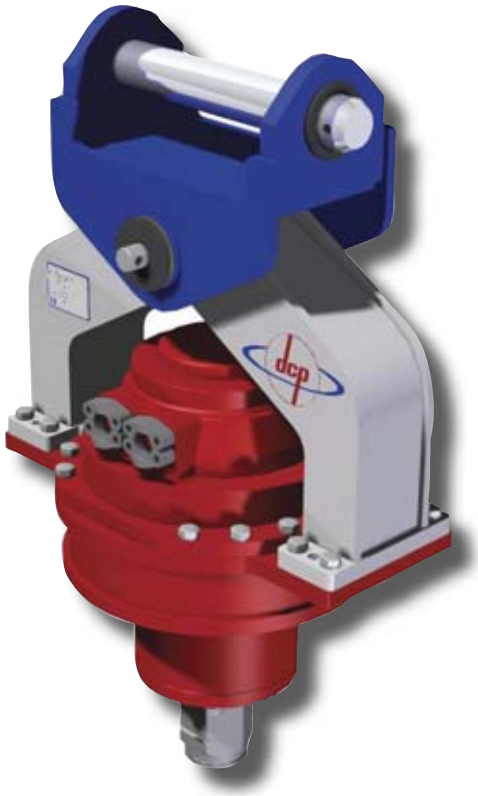

EXCAVATOR MOUNTED DRILL

Dawson's excavator mounted drilling machine has been designed to fit via an adaptor plate to the stick arm of an excavator and runs via the flow and return lines that normally supply the bucket or a double acting breaker circuit .

There are five models to choose from starting at 17.5kNm up to 48.5kNm that cover a wide range of applications from drilling precise holes in many varied ground conditions, subject to the auger/drill bit, through to stirring the ground prior to using a Dawson EMV vibro piling machine.

By selecting the correct drill bit combined with the down-crowd force of the excavator the EMD will make light work of the most demanding conditions.

Another benefit of the EMD is that because its mounted on your excavator you can drill vertical holes, anywhere the excavator goes. It's ideal for drilling over casings, on railway embankments, under bridges, or near power lines, + anywhere with low headroom constraints.

DIMENSIONS (mm)				
TYPE	A	B	C	WEIGHT (lbs)
EMD 50	1250	700	465	690
EMD 70	1250	725	500	710
EMD 100	1350	805	560	760
EMD 140-120	1450	905	600	850
EMD 140	1450	905	600	850

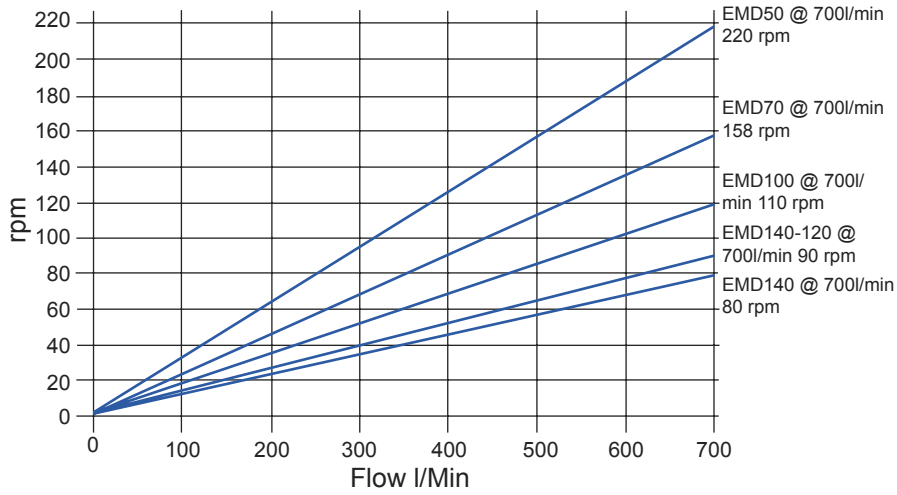

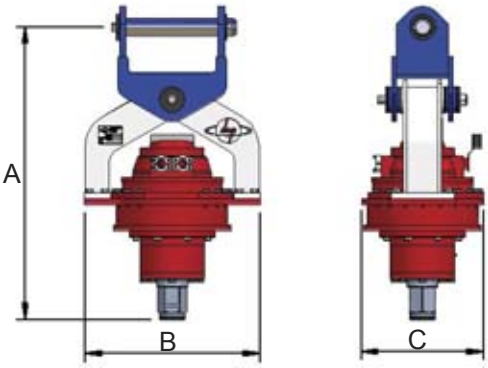

Typical Hex Adaptor

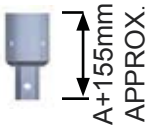

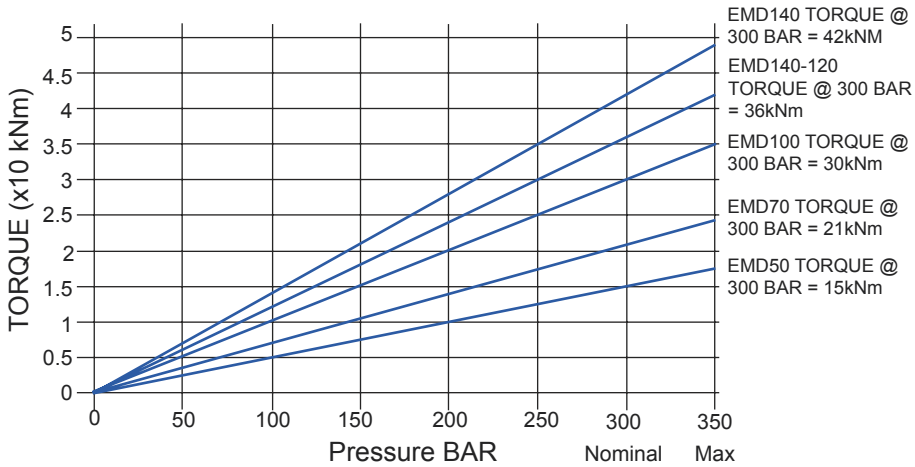

HPH2400E
HYDRAULIC HAMMER

Dawson Construction Plant Ltd
Chesney Wold.
Bleak Hall,
Milton Keynes,
MK6 1NE, England
Tel: +44 (0) 1908 240300
Fax: +44 (0) 1908 240222

Rev.H24E-02